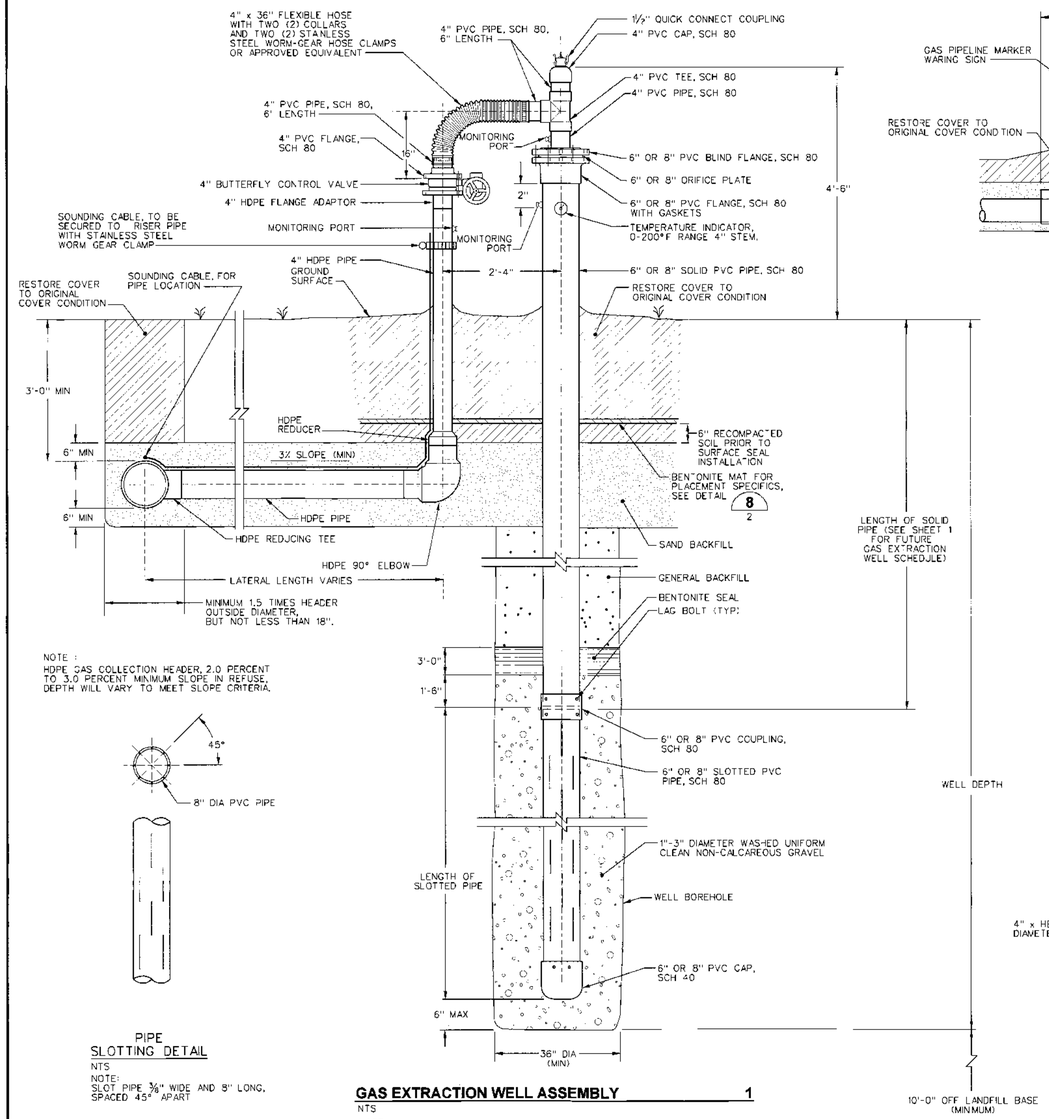


NOTE :
HDPE GAS COLLECTION HEADER, 2.0 PERCENT TO 3.0 PERCENT MINIMUM SLOPE IN REFUSE. DEPTH WILL VARY TO MEET SLOPE CRITERIA.




PIPE SLOTTING DETAIL
NTS
NOTE:
SLOT PIPE ⅜" WIDE AND 8" LONG, SPACED 45° APART

## GAS EXTRACTION WELL ASSEMBLY 1
NTS
NOTE:
1. AS AN ALTERNATIVE THE WELL PIPE MATERIAL MAY BE HIGH DENSITY POLYENTHYLENE (HDPE). THE "SLOTTED" PORTION OF THIS ALTERNATE PIPE MATERIAL MAY BE INSTEAD BE PERFORATED.

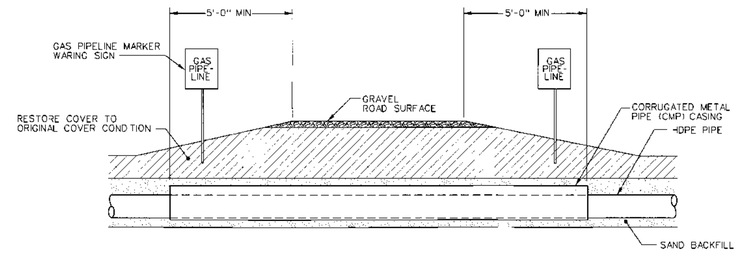


## TYPICAL HEADER CASING 2
NTS
NOTES:
1. CONTRACTOR IS RESPONSIBLE FOR ROADWAY REPAIR TO ORIGINAL CONDITION AFTER CONSTRUCTION.
2. IN AREAS WHERE ROAD CASING IS REQUIRED, USE GALVANIZED CMP CASING TWO PIPE SIZES LARGER THAN HEADER PIPE.
3. LOCATION OF ALL ROAD CASINGS TO BE FIELD DETERMINED BY OWNER.

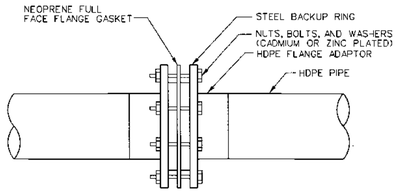


## FLANGE CONNECTION (TYP) 3
NTS

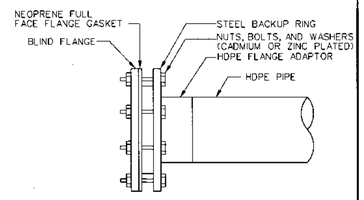


## BLIND FLANGE (TYP) 4
NTS

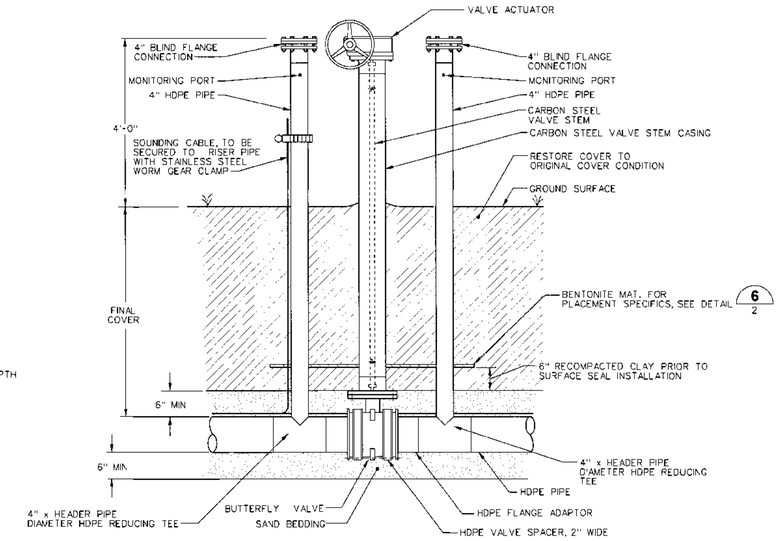


## UNDERGROUND CONTROL VALVE 5
NTS
NOTE:
1. VALVE TO BE CYCLED BEFORE BACKFILLING AND INSTALLED CLOSED.

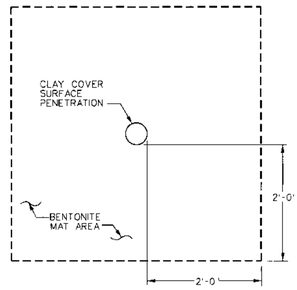


## TYPICAL BENTONITE SURFACE SEAL 6
NTS
NOTES:
1. BENTONITE IS TO BE INSTALLED WITH THE THICKER (NON-WOVEN) SIDE DOWN, AND THE THINNER (WOVEN) SIDE UP
2. CONTRACTOR SHALL THOROUGHLY COVER ANY CUT MADE TO THE BENTONITE MAT FOR INSTALLATION WITH BENTONITE CHIPS.
3. BENTONITE MAT AND BENTONITE CHIPS SHALL BE WATER SATURATED PRIOR TO BACKFILLING.

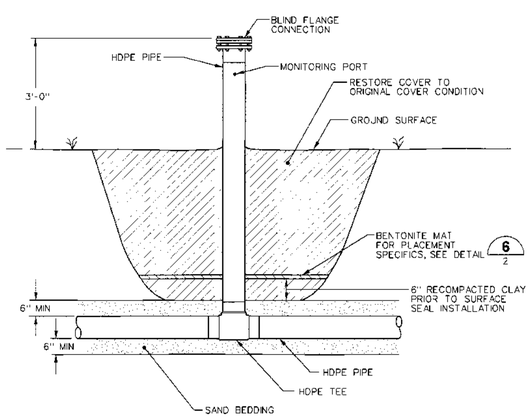


## HEADER ACCESS RISER 7
NTS

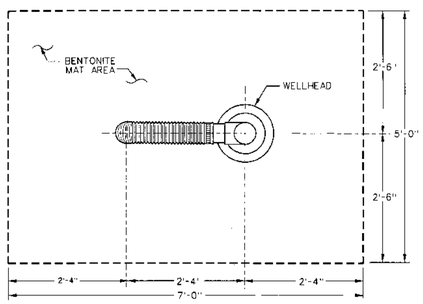


## TYPICAL WELLHEAD WITH SURFACE SEAL 8
NTS
NOTES:
1. BENTONITE IS TO BE INSTALLED WITH THE THICKER (NON-WOVEN) SIDE DOWN, AND THE THINNER (WOVEN) SIDE UP
2. CONTRACTOR SHALL THOROUGHLY COVER ANY CUT MADE TO THE BENTONITE MAT FOR INSTALLATION WITH BENTONITE CHIPS.
3. BENTONITE MAT AND BENTONITE CHIPS SHALL BE WATER SATURATED PRIOR TO BACKFILLING.

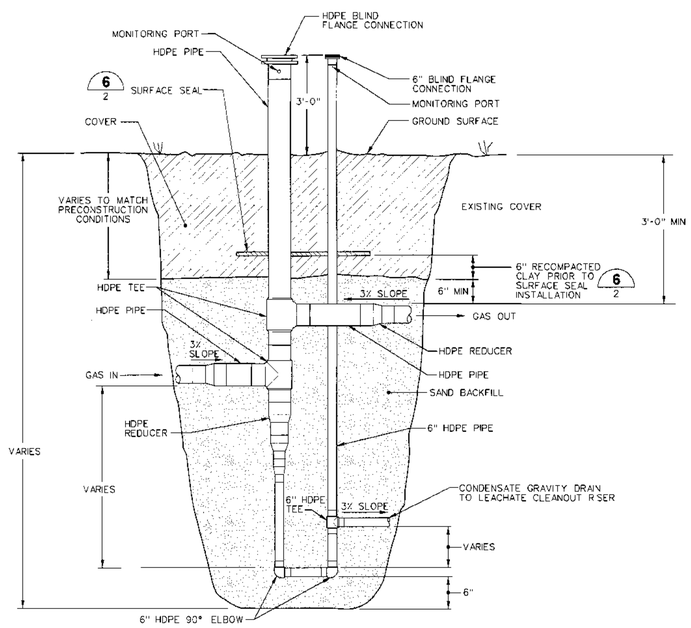


## CONDENSATE DRIPLEG 9
NTS

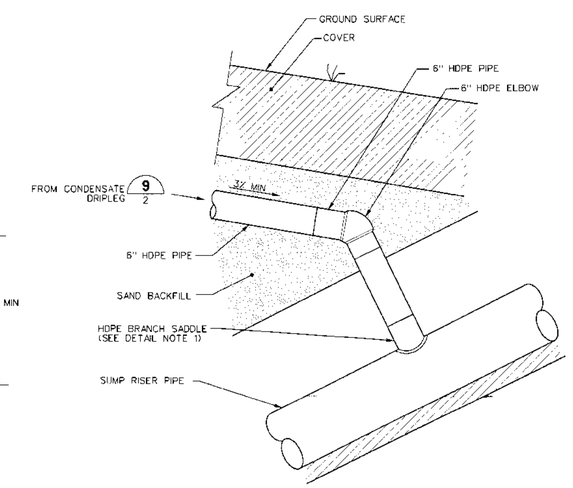


## LEACHATE CLEANOUT RISER CONNECTION 10
NTS
NOTE:
1. AN ALTERNATIVE CONNECTION TO THE BRANCH SADDLE MAY BE UTILIZED AT THE OWNER'S DISCRETION.

RECEIVED
NOV - 6 2003
DEPARTMENT OF ENVIRONMENTAL MANAGEMENT OFFICE OF LAND QUALITY

## PLAN NOTES
1. ALL HDPE PIPE IS SDR-17 AND ALL FITTINGS ARE SDR-11 UNLESS OTHERWISE NOTED.
2. ALL PVC PIPE AND FITTINGS ARE SCH 80 ULESS OTHERWISE NOTED.
3. CLEAN SAND BEDDING AND BACKFILL COMPACTED IN MAXIMUM LIFTS OF 9".
4. CONTRACTOR TO REPAIR COVER TO ORIGINAL CONDITIONS AND SPECIFICATIONS.
5. ALL NUTS, BOLTS AND WASHERS ARE CADMIUM PLATED UNLESS OTHERWISE STATED.

| NO | DATE | DRN | CHK | REVISIONS |
|---|---|---|---|---|
| | | | | |

| NO | DATE | DRN | CHK | REVISIONS |
|---|---|---|---|---|
| | | | | |

DRN DCS
CHK
APP

Copyright © EARTH TECH All Rights Reserved

EARTH TECH

NSPS LANDFILL GAS MANAGEMENT SYSTEM PLAN
OAK RIDGE RECYCLING AND DISPOSAL FACILITY
LOGANSPORT, INDIANA

GAS SYSTEM DETAILS

| | |
|---|---|
| DATE | JUNE 2003 |
| PROJECT NO | 67205 |
| FILENAME | 1DET.DGN |
| SHEET NO | |
| DRAWING NO | 2 |