AIR POLLUTION CONTROL PERMIT APPLICATION

RECEIVED

For Agency Use Only:	Application Tracking #: T081-7483
	Application Receipt Date: DEC 1 1 1996

STATE OF INDIANA
DEPARTMENT OF ENVIRONMENTAL MANAGEMENT
OFFICE OF AIR MANAGEMENT

A. Date Application Completed: December 1, 1996

B. General Application Information

1. Type of permit for which application is made (Check all that apply):

X	a) Part 70 Permit	X	i) Initial	iv) Modification:	
	b) FESOP Permit		ii) Renewal		Minor
			iii) General		Significant
	c) Construction Permit (check one)		i) Construction of new plant or facility		ii) Modification of existing plant or facility

For Construction permit application, complete the following table:

iii. Date construction* will or did start Day/Mo./Yr.	vi. Date construction will be or was completed Day/Mo./Yr.	v. Date operation will or did begin Day/Mo./Yr.
Actual NA	Actual NA	Actual NA
Estimate	Estimate	Estimate

Construction Permit Only - New or Modified Unit Identification

NA			

2. EPA Area Designation (check all that apply)

Designation		Ozone	CO	PM_{10}	SO_2	NOx	TSP	Lead
Attainment		X	X	X	X	X	X	X
Unclassifiable		X	X	X		X		X
Nonattainment	Primary							
	Secondary							
	Severe							
	Moderate							
	Marginal							

C. General Source Information

1.	Company Name: Arvin North American Automotive				
2.	Mailing Address: 1001 Hurricane Street				
	Franklin, Indiana 46131				
3.	Street Address (if different): Same as above				
4.	Contact Person: Mr. Liston Hinson				
5.	Telephone No.: (812) 379-3646				
6.	Fax No. (optional): (812) 379-3861				
7.	Longitude: 86° 02' 48"	Latitude: 39° 29' 32"			
8.	UTM Coordinates (if known):				
Zone	Horizontal	Vertical			
9.	Is the source located within 50 miles of an adjacent state?	Yes		No	X

D. Owner Information

1.	Company Name: Arvin Industries, Inc.
2.	Address: P.O. Box 3000
	Columbus, Indiana 47202
3.	Telephone No.: (812) 379-3000
4.	Agent: KERAMIDA Environmental, Inc.
5.	Address: 330 North College Avenue
	Indianapolis, Indiana 46202
6.	Telephone No.: (317) 687-6600
7.	Fax No. (optional): (317) 685-6610

E. Operator Information (if different than owner)	
1.	Company Name: Arvin North American Automotive
2.	Address: 1001 Hurricane Street
	Franklin, Indiana 46131
3.	Telephone No.: (317) 736-7111
4.	Contact Person: Mr. Liston Hinson
5.	Telephone No.: (812) 379-3646
6.	Fax No. (optional): (812) 379-3861

F. Responsible Official	
1.	Name: Mr. James L. Stegemiller
2.	Title: Vice President GM Business Unit
3.	Address: 1001 Hurricane Street
	Franklin, Indiana 46131
4.	Telephone No.: (317) 736-7111 ext. 2901
5.	Fax No. (optional): (317) 346-2909

G. Certification of Truth, Accuracy and Completeness

Note: This certification must be signed by a responsible official (see instructions). Applications without a signed certification will be returned as incomplete.

I certify under penalty of law that, based on information and belief formed after reasonable inquiry, the statements and information contained in this application are true, accurate and complete.

Name (typed): Mr. James L. Stegemiller	
Title: Vice President GM Business Unit	
Signature: James L. Stegemiller	Date: 12-5-96

H. Library Location
Library Name: Johnson County Public Library
Address: 401 South State Street, Franklin, IN 46131-2545
Telephone Number: (317) 738-2833

I. Plant Description

1. List all processes and products for normal operation:

SIC Code	Process	Products
3714	Manufacture Automotive Components	Automotive Components

J. Current Operating/Construction Permit Number(s): (see instructions)

Unit/Facility ID	Permit Number	Unit/Facility ID	Permit Number
CPB-1, Cadillac Paint Booth	081-4910	B-3, 2.7 MMBtu/hr Johnston Boiler	081-2328
DO-1, 6.4 MMBtu/hr Dry-off Oven*	081-4910	B-4, 11.7 MMBtu/hr Cleaver Brooks Boiler	081-2328
PW-1, 1.5 MMBtu/hr Parts Washer*	081-4910	PW-4, 0.8 MMBtu/hr Parts Washer*	081-2328
PW-2, 1.5 MMBtu/hr Parts Washer*	081-4910	BO-1, 1.2 MMBtu/hr Bake Oven*	081-2328
PW-3, 0.8 MMBtu/hr Parts Washer*	081-4910	T-1, 300 gallon diesel fuel storage tank*	081-2328
MPB-1, Mazda Paint Booth	081-2328	T-2, 300 gallon gasoline storage tank*	081-2328
B-1, 3.6 MMBtu/hr Kewanee Boiler	081-2328	T-3, 300 gallon gasoline storage tank*	081-2328
B-2b, 3.6 MMBtu/hr Cliff Boiler	081-2328	T-4, 300 gallon gasoline storage tank*	081-2328
B-2a, 3.6 MMBtu/hr Cliff Boiler	081-2328	T-5, 58,753 gallon No. 2 Fuel-oil Tank*	081-2328

* Insignificant Activities

K. Limited Liability - SB 417

Unit/Facility ID	Unit/Facility ID	Unit/Facility ID	Unit/Facility ID
NA			

T081-7483

ARVIN
NORTH AMERICAN AUTOMOTIVE

RECEIVED

DEC 11 1996

STATE OF INDIANA
DEPARTMENT OF ENVIRONMENTAL MANAGEMENT
OFFICE OF AIR MANAGEMENT

December 5, 1996

Mr. Paul Dubenetzky, Chief
Office of Air Management - Permits Branch
Indiana Department of Environmental Management
Indiana Government Center North, 10th Floor
100 North Senate Avenue
P.O. Box 6015
Indianapolis, Indiana 46206-6015

Re: Part 70 Permit Application for Arvin North American Automotive's Franklin Plant, Indiana Automotive Parts Plant (Plant ID # 081-00020)

Dear Mr. Dubenetzky:

Enclosed please find a Part 70 permit application for Arvin North American Automotive's Franklin, Indiana automotive parts plant, located at 1001 Hurricane Street, Franklin, Indiana. This facility is located in an area which has been designated as attainment or unclassifiable for all of the criteria pollutants. The facility manufactures automotive exhaust system components. The primary emission sources include two paint lines with a total of two paint booths and five natural gas-fired boilers with fuel-oil back-up.

Arvin stipulates that this facility is a Title V major source for HAPs. We have not included detailed estimates of potential emissions, but do have current submittals on file of our annual emissions statement.

State prohibitory regulations which apply to this facility include the following: process weight particulate limits for the surface coating operations (326 IAC 6-3); a

40% opacity limit for all of the particulate emission sources (326 IAC 5-1); and a limit of 3.5 lbs. VOC per gallon of coating for the surface coatings applied on the two paint lines (326 IAC 8-2-9). This facility is also subject to state procedural and administrative requirements including the requirement to maintain operating permits and obtain construction permits for new equipment, file annual emissions reports, report equipment malfunctions, and pay annual operating permit fees. There are no federal New Source Performance Standards (NSPS) or National Emission Standards for Hazardous Air Pollutants (NESHAP) which currently apply to this facility. The facility's compliance status with all applicable state and federal regulations was evaluated. It was determined, after a reasonable inquiry, that the facility can certify compliance with all of these regulations. We have included our facility's current operating permits in Attachment 1 in order to facilitate your review of our application. Please note that a number of sources listed on our current permits are insignificant activities under the Title V regulations, and have been treated as such in our application.

Attachment 3 contains our proposed Compliance Monitoring Plan (CMP). The plan has been prepared based on IDEM's May 15, 1996 guidance. It is our understanding that the guidance only applies to emissions of Volatile Organic Compounds (VOCs), Particulate Matter (PM) and SO_2. We further understand that additional compliance monitoring (beyond that which is required by current permits) is only required for emission units with allowable emissions greater than 10 lbs/hr (if controls are used) or 25 tons/year (if controls are not used). The Table in our CMP (Attachment 6) lists each of the significant emission units listed in our Title V application along with allowable and actual emission rates for VOCs, and/or PM. The table also summarizes current compliance monitoring requirements contained in our existing permits and references proposed permit conditions for each of the emission units. The CMP also summarizes our preventive maintenance measures for each of the emission units which have control equipment. A more detailed preventive maintenance plan is located at the plant and may be examined upon request.

The May 15, 1996 guidance indicates that performance testing of emission units will only be required for emission units with greater than 100 tons/year of actual emissions. None of our emissions units has actual or potential emissions in excess of 100 tons/year. Therefore, we do not believe that the Title V permit should include any performance testing requirements for these units.

Next year we plan to move the Mazda paint line from the Franklin, Indiana Plant to our Gladstone facility in Columbus, Indiana (Plant ID # 005-00058). We have included the Mazda line in this application in order to ensure its completeness, and will update the application when the relocation takes place. We will be sending in a separate construction permit application to locate the paint line at the Gladstone Facility.

If you have questions regarding our application, please do not hesitate to contact me at (812) 379-3646 or Tom Rarick of KERAMIDA Environmental at (317) 685-6600. KERAMIDA assisted us with the preparation of this application.

Sincerely,
Arvin North American Automotive

L. Liston Hinson, Jr. CHMM
Divison Environmental Manager

E, C

TABLE OF CONTENTS

Application Sections

Attachments (Color Tabs)

COMPLETENESS CHECKLIST SUMMARY

Company Name: Arvin North American Automotive	Plant ID#: 080-00020

FORM #	FORM NAME	C	I	N/A
GSD-01	General Source Information	X		
GSD-02	Plant Layout	X		
GSD-03	Flow Diagram	X		
GSD-04	Stack/Vent Information	X		
GSD-05	Fugitive Emissions Source Description	X		
GSD-06	Emission Unit Description	X		
GSD-06(a)	General Unit/Activity Information	X		
GSD-09	Miscellaneous Information	X		
GSD-10(a)	Insignificant Activities	X		
GSD-11	Alternative Operating Scenarios			X

PROCESS/CONTROL EQUIPMENT COMPLIANCE

FORM #	Number of Forms	FORM NAME	CE FORM	CD-01	CD-02	CD-03	CD-04
PI-01		Incineration					
PI-02	4	Combustion		X		X	X
PI-03		Bulk Material					
PI-04		Asphalt Plant					
PI-05		Brick/Clay					
PI-06		Reciprocating I/C					
PI-07		Gas Turbine					
PI-08		Concrete					
PI-09		Degreasing					
PI-10		Dry Cleaners					
PI-11		Foundries					
PI-12		Grain Elevators					
PI-13		Lime Mfg.					
PI-14		Tank Storage					

FORM #	Number of Forms	FORM NAME	CE FORM	CD-01	CD-02	CD-03	CD-04
PI-15		Portland Cement					
PI-16		Printing					
PI-17		Sand/Gravel					
PI-18		Nonmetallic Mineral					
PI-19	2	Surface Coating	X	X		X	X
PI-20		Wood/Plastic					
PI-21		Soil Remediation					
PI-22		Vehicle Traffic					
PI-23		Pneumatic Blasting					
PI-24		Plastics/Composites					
PI-25		Welding/Cutting					
PI-26		Miscellaneous					
PI-27		Fugitive VOC/HAP					
PI-28		Mechanical Blasting					
PI-29		Electroplating					

SOURCE COMPLIANCE INFORMATION

FORM #	FORM NAME	C	I	N/A
CD-05	Compliance Certification	X		

OVERALL COMPLETENESS OF APPLICATION

Application complete; begin processing:	
Application incomplete; additional information required:	

Comments:

Reviewer:	Date:

COMPLIANCE CERTIFICATION

Company Name: Arvin North American Automotive, Franklin
Source ID: 081-00020

Note: This form is completed once per application (not once for each emissions unit/facility) with respect to all applicable requirements at the source.

CERTIFICATION OF SOURCE COMPLIANCE STATUS (check one)

X	I hereby certify that, based on information and belief formed after reasonable inquiry, the source described in this air pollution control permit application is fully in compliance with all applicable requirements and will continue to comply with those requirements.
	I hereby certify that, based on information and belief formed after reasonable inquiry, the source described in this air pollution control permit application is fully in compliance with all applicable requirements, except for the following emissions unit(s) (facilities):

Unit Identification	Applicable Requirement

PERMIT TERM COMPLIANCE CERTIFICATION SCHEDULE

Date of first certification submittal:	One year after the Title V permit is issued
Frequency of future submittals: (at least annually)	Annually

SIGNATURE OF RESPONSIBLE OFFICIAL

Name (typed): Mr. Jim Stegemiller	
Title: Vice President GM Business Unit	
Signed: James F. Stegemiller	Date: 12-5-96

PLANT LAYOUT AND GEP STACK HEIGHT INFORMATION

This form provides the Modeling and Permitting sections with the appropriate information for determining potential emissions. Please use this page as a check list. If you do not provide the necessary information, applicable to your source, the application process ***will be stopped****.*

1. You ***must*** provide drawings, each one ***must*** be to scale, with the actual scale shown. All dimensions and units ***must*** be clearly indicated with a brief explanation of what is being shown. Include the following (check when completed):

A. X	Building height(s) (feet)
B. X	Building width(s) (feet)
C. X	Building length(s) (feet)
D. X	Building(s) distance to property lines (feet)
E. X	Surrounding building(s) dimensions and heights (feet)
F. X	Indicate any access-limiting features such as fences (feet)
G. X	Indicate the distance to the nearest residence (feet)
H. X	Provide Universal Transverse Mercator coordinates or latitude/longitude of stack(s) or of building/property

2. You ***must*** show the location of all applicable emission points and identify each one. Points required but not limited to:

A. X	Exhaust stacks (include stack identification numbers)
B. X	Roof monitors
C. X	Control devices (include information numbers)
D. X	Process vents (horizontal discharge, vertical discharge, center height of vent) (include identification numbers)

Identify <u>each</u> of these emission points under "Stack Identification" on the appropriate forms and on FORM GSD-04, STACK/VENT INFORMATION, if required to complete GSD-04.

3. You must show the following:

A. X	All roadways
B. X	Description of roadway surfaces (gravel, dirt, paved, etc.)
C. X	Indicate number of lanes

4. You ***must*** include a compass pointing north

The construction permitting section has provided an example of a source layout. This is only an example and has not been drawn to scale. You are not limited to this illustration; add any information you feel necessary. The layout is very important to the Air Management Modelers, thus accuracy is important. It would be helpful to the modelers if you would provide the building's(s') measurements and indicate the building(s) to be permitted.

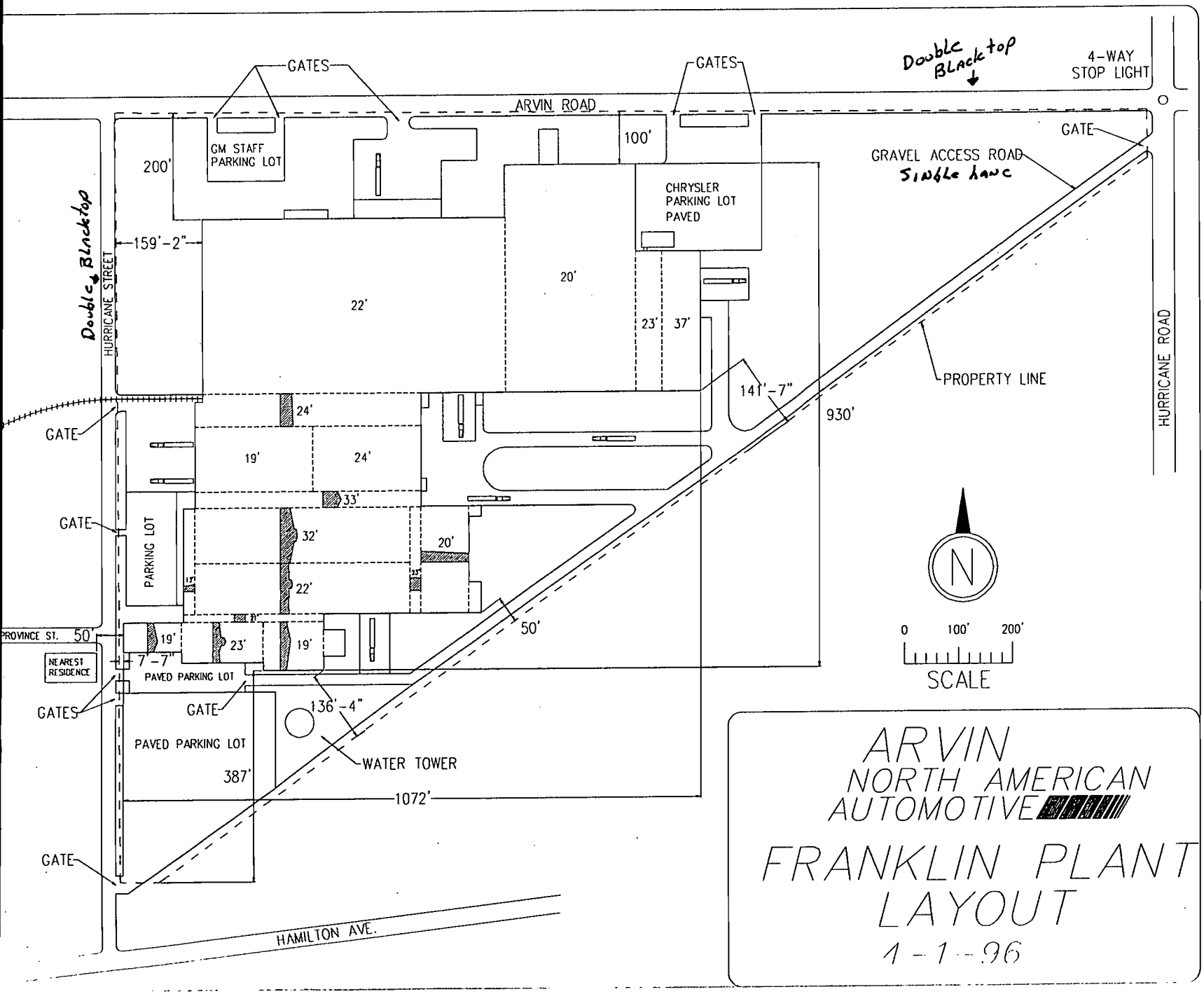
GATES
GATES
Double Blacktop
4-WAY STOP LIGHT
ARVIN ROAD
GM STAFF PARKING LOT
200'
100'
GATE
GRAVEL ACCESS ROAD
Single lane
CHRYSLER PARKING LOT PAVED
159'-2"
Double Blacktop
HURRICANE STREET
22'
20'
23'
37'
141'-7"
930'
PROPERTY LINE
HURRICANE ROAD
GATE
24'
19'
24'
33'
GATE
PARKING LOT
32'
20'
22'
50'
PROVINCE ST.
50'
19'
23'
19'
NEAREST RESIDENCE
7'-7"
PAVED PARKING LOT
GATES
GATE
136'-4"
PAVED PARKING LOT
WATER TOWER
387'
1072'
GATE
HAMILTON AVE.
N
0
100'
200'
SCALE
ARVIN
NORTH AMERICAN
AUTOMOTIVE
FRANKLIN PLANT
LAYOUT
1-1-96

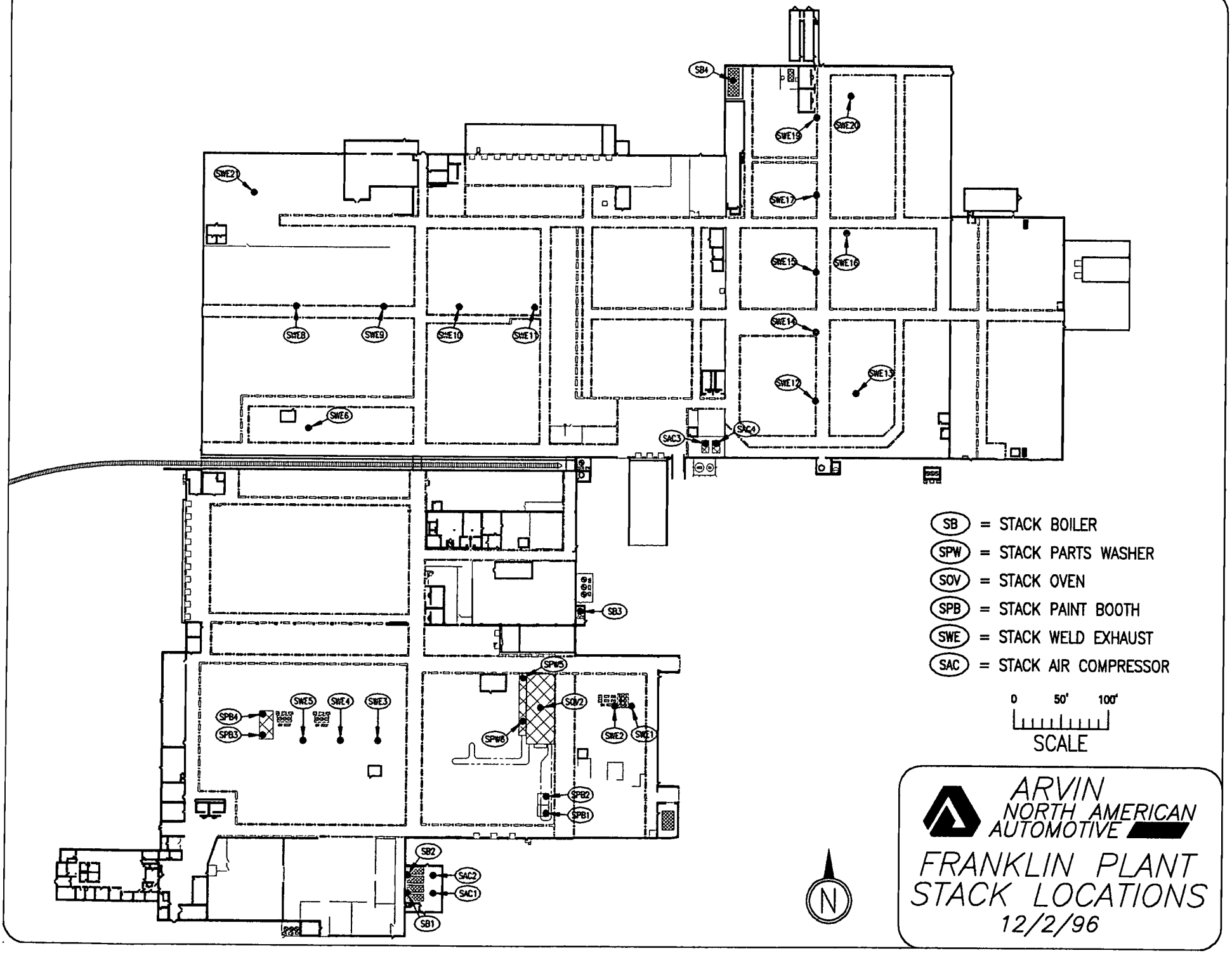
SB4
SWE19
SWE20
SWE21
SWE17
SWE16
SWE15
SWE14
SWE13
SWE12
SWE8
SWE9
SWE10
SWE11
SWE6
SAC3
SAC4
SB3
SPW5
SOV2
SPW6
SWE5
SWE4
SWE3
SPB4
SPB3
SWE2
SWE1
SPB2
SPB1
SB2
SAC2
SAC1
SB1
SB = STACK BOILER
SPW = STACK PARTS WASHER
SOV = STACK OVEN
SPB = STACK PAINT BOOTH
SWE = STACK WELD EXHAUST
SAC = STACK AIR COMPRESSOR
0 50' 100'
SCALE
N
ARVIN
NORTH AMERICAN
AUTOMOTIVE
FRANKLIN PLANT
STACK LOCATIONS
12/2/96

FLOW DIAGRAM

This permit application must include a simple flow diagram of your operation. The purpose of the flow diagram is to understand the process and potential emission points. Please use this form as a check list. Any ***information missing*** *will* ***halt*** *or* ***prolong*** *the review process. Duplicate this form as needed..*

Include all applicable information in the flow diagram:

Check when completed:

1. X	State the raw material input in lbs/hr.
2. X	State the maximum hourly capacity of each step of the operation in lbs/hr.
3. X	Show all equipment, emitting pollutants, used in the process. Include identification numbers.
4. X	Indicate additions and modifications to an existing process.
5. X	Show location of stacks (include stack identification).
6. X	Show location and process which the air pollution control equipment (CE) abates. Include identification numbers for control equipment (CE).
7. X	Indicate the actual operation schedule for each unit/facility, if the units at the source operate on different schedules.

Source Data -- FORM GSD-03

AIR POLLUTION CONTROL PERMIT APPLICATION INSTRUCTIONS

Instructions on how to fill out FORM GSD-03. Any **information missing** in FORM GSD-03 will **halt** or **prolong** the review process.

1. Use the air permitting section's flow diagram as an example in developing your flow diagram. You are not limited to this flow diagram; add any information you feel necessary.

2. **Stack Data:**
   Always include the stack identification, height, diameter, gas discharge temperature, and gas flow rate on FORM GSD-04, STACK/VENT INFORMATION. The information you provide is necessary for the modeling section. This information only required of construction permit applications or sources having constructed or operated without permit.

3. **Actual Operation Schedule:**
   Please provide the source's actual operating hours; this information is important to the air modeling section. If the units within the source operate on different schedules, provide the individual unit schedules.

(For your information, the Indiana State Law requires the permitting section to base potential emissions on 24 hours per day, seven (7) days per week and 365 days per year.)

ARVIN - FRANKLIN

PRODUCTION

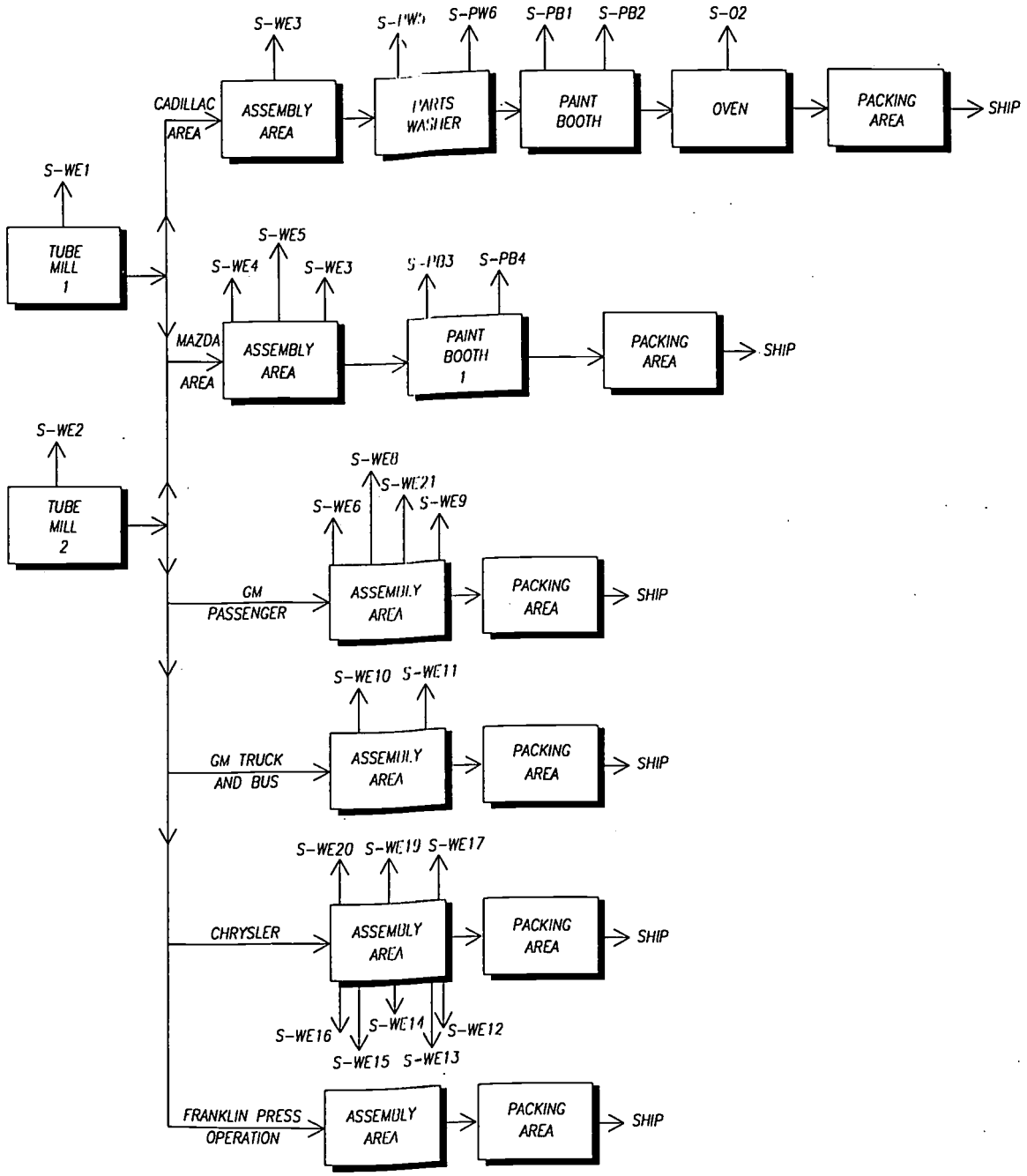

SUPPORT / FACILITY

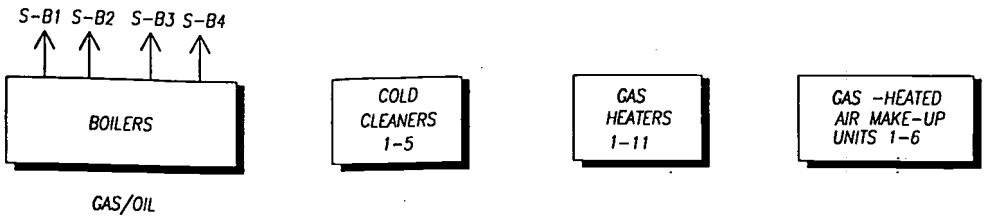

STACK/VENT INFORMATION

Use this form to summarize additional information for the stacks and/or vents identified on FORM GSD-02, PLANT LAYOUT. The identification numbers must corresponde to the numbering used for FORM GSD-02. Missing or inconsistent information will delay the application review and could result in permit denial. [This form for construction permits or non-permitted sources only]

S/V ID # 1	Stack Type 2	Stack Height 3	Stack Shape 4	Stack Dimensions 5	Max. Flow Rate 6	Est. Stack Gas Temp. 7	Related S/V Numbers 8
Based on IDEM "White Paper" Guidance, only non-permitted sources are required to be listed on this form							

FUGITIVE EMISSIONS SOURCE DESCRIPTION FORM

Use this form to identify and describe fugitive emissions at the source.

Note: Fugitive emissions are air emissions which could not reasonably pass through a stack, chimney, vent, or other equivalent opening (i.e., coal piles, outdoor valves, flanges, unpaved road emissions, etc.)

ID# 1	Pollutant Emitted 2	Brief Description 3	Emissions 4
NA	NA	None	NA

EMISSION UNIT DESCRIPTION FORM

Note: Use this form to identify emission units and corresponding stacks/vents. Fugitive emissions should be identified on form GSD-05. Emission units that qualify as Insignificant Activities should not be listed here, but should be listed on the Insignificant Activities Form (GSD-10).

Complete the following table for all emissions units at the source.

S/V ID 1	Emis Unit ID 2	Manufacturer 3	Model Number 4	Install. Date 5	Serial Number / Brief Description 6	Maximum Unit Capacity 7
S-PB1, 2	CPB-1	Unknown	Unknown	2/4/94	Cadillac Line Paint Booth	137 Mufflers/hr
S-PB3, 4	MPB-1	Unknown	Unknown	11/6/92	Mazda Line Paint Booth 1	112.5 Assemblies/hr
S-B-1	B-1	Kewanee	Unknown	Pre-1989	Kewanee Boiler	3.6 MMBtu/hr
S-B-2	B-2a	Cliff	Unknown	Pre-1989	Cliff Boiler	3.6 MMBtu/hr
S-B-2	B-2a	Cliff	Unknown	Pre-1989	Cliff Boiler	3.6 MMBtu/hr
S-B-3	B-3	Johnston	Unknown	Pre-1989	Johnston Boiler	2.7 MMBtu/hr
S-B-4	B-4	Cleaver Brooks	Unknown	Pre-1989	Cleaver Brooks Boiler	11.7 MMBtu/hr

GENERAL UNIT / ACTIVITY INFORMATION

Plant ID#: 081-00020

This form is to be used to describe those units or activities that are not subject to any applicable requirements or those that are only subject to generic or generally applicable requirements affecting a large number of activities (i.e., opacity rules). The applicability of these requirements does not normally depend on the emissions of the units or activities. Those units or activities that are included on this form do not require a separate Process Information, Control Equipment, or Compliance Information form (see instructions).

1. Unit/Activity Description	2. Pollutant(s)	3. Citation	4. Citation Description	5. Test Method	6. In Cmp?	7. S/L
None						

SOURCE POLLUTANT EMISSIONS SUMMARY

Use this form to identify and quantify emissions for each unit or facility and the total emissions of the source. Do not include Hazardous Air Pollutant (HAP) emissions on this form. **Use FORM GSD-08 for HAP emissions.**

1. UNIT BY UNIT SUMMARY

Unit ID	S/V ID	Pollutant	Actual			Potential		
				U	TPY		U	TPY
Emission Statement on File								

1 = lb/hr	3 = grains/dscf	5 = ppmdv	7 = other (specify):
2 = lb/mmBtu	4 = lb/gallon	6 = other (specify):	8 = other (specify):

SOURCE HAZARDOUS AIR POLLUTANT EMISSIONS SUMMARY

Use this form to present Hazardous Air Pollutant (HAP) emissions for each unit or facility and the total HAP emissions of the source.

1. UNIT BY UNIT HAP SUMMARY

Unit	S/V ID	Pollutant	CAS #	Actual			Potential		
					U	TPY		U	TPY
Emission Statement on File									

1 = lb/hr	3 = Mg/year	5 = other (specify):	7 = other (specify):
2 = lb/day	4 = ppmdv	6 = other (specify):	8 = other (specify):

MISCELLANEOUS INFORMATION

Unit ID: NA	Item #: NA

Form number to be supplemented:	None

Additional descriptive/narrative information:

Mazda Paint Line is scheduled to be moved in 1997. It will likely not exist at this location at the time the Title V Permit is issued. A modified application will be submitted when this change occurs.

Addition calculations/diagrams:

Insignificant Activities (Listed)

The following activities or categories of activities must be listed in a Part 70 or FESOP permit application. Detailed information concerning the emissions of these activities is not required; however, detailed emissions information must be provided upon request by the department. Indicate which activities are present by checking the appropriate box. For those activities not listed, provide a brief description of the activities or categories of activities considered insignificant on the last page of this form.

✓	Emissions Unit Type (brief description)

1) Space heaters, process heaters, or boilers using the following fuels.

X	A) Natural gas-fired combustion sources with heat input equal to or less than ten million (10,000,000) Btu per hour.
	B) Propane or liquefied petroleum gas, or butane-fired combustion sources with heat input equal to or less than six million (6,000,000) Btu per hour.
	C) Fuel oil-fired combustion sources with heat input equal to or less than two million (2,000,000) Btu per hour and firing fuel containing less than five-tenths (0.5) percent sulfur by weight.
	D) Wood-fired combustion sources with heat input equal to or less than one million (1,000,000) Btu per hour and not burning wood refuse, treated wood or chemically contaminated wood.

2)

	Equipment powered by internal combustion engines of capacity equal to or less than 500,000 Btu/hour, except where total capacity of equipment operated by one stationary source exceeds 2,000,000 Btu/hour.

3)

	Combustion source flame safety purging on startup.

4)

X	A gasoline fuel transfer and dispensing operating handling less than or equal to 1,300 gallons per day, such as filling of tanks, locomotives, automobiles, having a storage capacity less than or equal to 10,500 gallons.

5)

	A petroleum fuel, other than gasoline, dispensing facility, having a storage capacity of less than or equal to 10,500 gallons, and dispensing less than or equal to 230,000 gallons per month.

6) The following VOC and HAP storage containers:

X	A) Storage tanks with capacity less than or equal to 1,000 gallons and annual throughputs less than 12,000 gallons.
X	B) Vessels storing lubricating oils, hydraulic oils, machining oils, and machining fluids.

7)

	Refractory storage not requiring air pollution control equipment.

8)

	Packaging lubricants and greases.
	Filling drums, pails or other packaging containers with lubricating oils, waxes, and greases.

9)

	Application of oils, greases, lubricants or other nonvolatile materials applied as temporary protective coatings.

10)

	Machining where an aqueous cutting coolant continuously floods the machining interface.

11)

X	Degreasing operations that do not exceed 145 gallons per 12 months, except if subject to 326 IAC 20-6.

12)

	Cleaners and solvents characterized as follows: A) having a vapor pressure equal to or less than 2 kPa; 15mm Hg; or 0.3 psi measured at 38 degrees C (100°F) or; B) having a vapor pressure equal to or less than 0.7 kPa; 5mm Hg; or 0.1 psi measured at 20°C (68°F); the use of which for all cleaners and solvents combined does not exceed 145 gallons per 12 months.

13)

X	The following equipment related to manufacturing activities not resulting in the emission of HAPs; brazing equipment, cutting torches, soldering equipment, welding equipment.

14)

	Closed loop heating and cooling systems.

15)

	Infrared cure equipment.

16)

	Exposure chambers ("towers", "columns"), for curing of ultraviolet inks and ultra-violet coatings where heat is the intended discharge.

17) Any of the following structural steel and bridge fabrication activities.

	Cutting 200,000 linear feet or less of one inch (1") plate or equivalent.
	Using 80 tons or less of welding consumables.

18)

	Rolling oil recovery system.

19)

	Groundwater oil recovery wells.

20)

	Solvent recycling systems with batch capacity less than or equal to 100 gallons.

21)

	Activities associated with the treatment of wastewater streams with an oil and grease content less than or equal to 1% by volume.

22)

	Water runoff ponds for petroleum coke-cutting and coke storage piles.

23)

	Activities associated with the transportation and treatment of sanitary sewage, provided discharge to the treatment plant is under the control of the owner/operator, that is, an on-site sewage treatment facility.

24)

	Any operation using aqueous solutions containing less than 1% by weight of VOCs excluding HAPs.

25)

	Water based adhesives that are less than or equal to 5% by volume of VOCs excluding HAPs.

26) Noncontact cooling tower systems with either of the following:

	Natural draft cooling towers not regulated under a NESHAP.
	Forced and induced draft cooling tower system no regulated under a NESHAP.

27)

	Quenching operations used with heat treating processes.

28)

	Replacement or repair of electrostatic precipitators, bags in baghouses and filters in other air filtration equipment.

29)

	Heat exchanger cleaning and repair.

30)

	Process vessel degassing and cleaning to prepare for internal repairs.

31)

	Trimmers that do not produce fugitive emissions and that are equipped with a dust collection or trim material recovery device such as a bag filter or cyclone.

32)

	Stockpiled soils from soil remediation activities that are covered and waiting transport for disposal.

33)

X	Paved and unpaved roads and parking lots with public access.

34)

	A) Covered conveyors for coal or coke conveying of less than or equal to 360 tons per day.
	B) Covered conveyors for limestone conveying of less than or equal to 7,200 tons per day for sources other than mineral processing plants constructed after August 31, 1983;
	C) Uncovered coal conveying of less than or equal to 120 tons per day.
	D) Underground conveyors.
	E) Enclosed systems for conveying plastic raw materials and plastic finished goods.

35)

	Coal bunker and coal scale exhausts and associated dust collector vents.

36)

	Asbestos abatement projects regulated by 326 IAC 14-10.

37)

	Purging of gas lines and vessels that is related to routine maintenance and repair of buildings, structures, or vehicles at the source where air emissions from those activities would not be associated with any production process.

38)

	Flue gas conditioning systems and associated chemicals such as the following: sodium sulfate; ammonia; and sulfur trioxide.

39)

	Equipment used to collect any material that might be released during a malfunction, process upset, or spill cleanup, including catch tanks, temporary liquid separators, tanks, and fluid handling equipment.

40)

	Blowdown for any of the following: sight glass; boiler; compressors; pumps; and cooling tower.

41)

	Furnaces used for melting metals other than beryllium with a brim full capacity of less than to equal to 450 cubic inches by volume.

42)

	On-site fire and emergency response training approved by the department.

43) Emergency generators as follows:

	Gasoline generators not exceeding 110 horsepower.
	Diesel generators not exceeding 1600 horsepower.
	Natural gas turbines or reciprocating engines not exceeding 16,000 horsepower.

44) Other emergency equipment as follows:

	Stationary fire pumps.

45)

	Grinding and machining operations controlled with fabric filters, scrubbers, mist collectors, wet collectors and electrostatic precipitators with a design grain loading of less than or equal to 0.03 grains per actual cubic foot and a gas flow rate less than or equal to 4000 actual cubic feet per minute, including the following: deburring; buffing; polishing; abrasive blasting; pneumatic conveying; and woodworking operations.

46)

	Purge double block and bleed valves.

47)

	Filter or coalescer media change out.

48)

	Vents from ash transport systems not operate at positive pressure.

49)

	Mold release agents using low volatile products (vapor pressure less than or equal to 2 kilopascals measured at 38 degrees (C).

50)

	A laboratory as defined in 326 IAC 2-7-1(20)(C).

51)

	Farm operations.

52) Activities or categories of activities with individual HAP emissions not previously identified.

	Any unit emitting greater than 1 pound per day but less than 5 pounds per day or 1 ton per year of a single HAP.
Brief Description**:	
Cadillac Line Welding/Assembly	
Mazda Line Welding/Assembly	
GM Passenger Line Welding/Assembly	
GM Truck Line Welding/Assembly	
Chrysler Line Welding/Assembly	

53) Activities or categories of activities with a combination of HAP emissions not previously identified.

	Any unit emitting greater than 1 pound per day but less than 12.5 pounds per day or 2.5 tons per year of any combination HAPs.
Brief Description**:	
Cadillac Line Welding/Assembly	
Mazda Line Welding/Assembly	
GM Passenger Line Welding/Assembly	
GM Truck Line Welding/Assembly	
Chrysler Line Welding/Assembly	

**The source shall provide a description of the insignificant activity, including identification of the HAPs emitted and any applicable requirements. A source may rely on MSDS sheets, product labels, other manufacturer's information, or other technical and scientific judgment for identification of HAPs. Insignificant activities that are part of a multi-step process line shall be reported as such and the source shall include a description of the function and components of the process line. Insignificant activities that perform equivalent functions shall be grouped and the function and number of the units shall be included in the application.

An applicant may wish to provide the information above on a separate sheet(s) and label GSD-10(a), Insignificant Activities, if additional space is needed.

50) Other activities or categories not previously identified: (provide brief description)

Insignificant Thresholds: Activities with emissions equal to or less than thresholds require listing only.

Lead (Pb) = 0.6 ton/year or 3.29 lbs/day
Sulfur Dioxide (SO_2) = 5 lbs/hour or 25 lbs/day
Nitrogen Oxides (NO_x) = 5 lbs/hour or 25 lbs/day
Carbon Monoxide (CO) - 25 lbs/day
Particulate Matter (PM) = 5 lbs/hour or 25 lbs/day
Volatile Organic Compounds (VOC) = 3 lbs/hour or 15 lbs/day

Tube Mills 1 & 2
Cadillac Line Welding/Assembly
Cadillac Line Heated Parts Washer
Cadillac Line Drying Oven
Mazda Line Welding/Assembly
GM Passenger Line Welding/Assembly
GM Truck Line Welding/Assembly
Chrysler Line Welding/Assembly
58,753 Gallon No. 2 Fuel-oil Tank

SURFACE COATING AND ACCESSORY SOLVENTS (as APPLIED)

Unit ID: CPB-1	S/V ID: S-PB1, 2
Segment ID: NA	SCC #: NA

DESCRIBE THE PRODUCT YOU ARE COATING (door, screens, pipes, etc...): Automobile components
INDICATE THE MATERIAL YOU ARE COATING (wood, plastic, metal, etc...): Plastic, Metal

1. Name of Coatings, Solvents, etc.	2. ID Number	3. Material density	4. Weight % Volatiles (Water and Organics)	5. Weight % Water	6. Volume % Water	7. Volume % Non-volatiles (solids)	8. Gallons of Material* Required for One Production Unit Gal/Production Unit	9. Maximum Number of Production Units per Hour	10. Annual Coating Usage**
Black HI Heat Bake Enamel	KB-0809-HSHH	11.79 lbs/gal	29.57%	0	0	20.8	0.014	137	7,032 gal.

* If more than one type of unit is coated in the same paint booth with the same coating, this amount should be based on the productoin unit requiring the most gallons per hour of material. If different coatings are used, they must be listed separately. Gallons per hour = Colums 9 x Column 9.

** 1995 Usage

Note: Attach a *Material Safety Data Sheet* (MSDS) and an EPA VOC Data Sheet for each material listed. DO NOT SEND THE ENTIRE MSDS. The required sections are: Product Identification, Hazardous Ingredients, and Physical characteristics information.

Density, Weight % Volatiles, and Weight % Water come from MSDS.

SURFACE COATING AND ACCESSORY SOLVENTS

1.	Application method [1]	Spray
2.	If sprayed, specify type [2]	Low Pressure - High Volume, Electrostatic Air Atomized
3.	Type of Overspray controls [3]	Dry Filters
4.	Control Efficiency	90%
5.	Type of Hydrocarbon controls [4]	Use of Compliant Coatings
6.	Control Efficiency	NA
7.	Stack Height (feet above ground)	NA
8.	Stack Diameter (inches)	NA
9.	Exhaust flow rate (acfm)	NA
10.	Exhaust Discharge Temperature °F	NA

(1) Method of application refers to dipping, spraying, rollcoating, brushing, flow coating, or other.

(2) Types of spray coating include: air atomization, airless, electrostatic disc, electrostatic airless, electrostatic air atomized, low pressure air atomization, low pressure-high volume, or other.

(3) Overspray controls include: dry and wet filters, baffles, waterwash, or other.

(4) Hydrocarbon controls include: catalytic or direct flame incineration, solvent recovery, carbon adsorption, or other.

11. Potential to Emit:

Pollutant	Maximum rate (units/hr)	Emission Factor (lb/units)	Emission Rate (lb/hr)	Maximum Uncontrolled Emissions (tons/yr)	Pollution Control Efficiency (%)	Maximum Controlled Emissions (tons/yr)
PM	Not required based on IDEM "White Paper" Guidance					
PM10						
SO_2						
NO_x						
VOC						
CO						
Lead						

12. Source of Emission Factors:	NA

PARTICULATE CONTROL EQUIPMENT

Unit ID: CPB-1	S/V ID: S-PB1, 2

1. Additional information needed to complete calculations:

Gas or Air flow rate (acfm)	Grain loading/actual standard cubic foot of outlet air	Average gas temperature °F	Actual collection efficiency %
30,000	0.003	Ambient	95%

2. Cyclone: NA

Average Particulate size at the inlet (microns)			
Number of tubes		Tube diameter (inches)	

3. Baghouse: NA

Fabric material	Total filter area (ft^2)	Air to cloth ratio air flow ($ascfm/ft^2$)	Pressure drop across baghouse inches of water	Method of bag cleaning (i.e., shaking, jetpulse, etc.)

4. Electrostatic Precipitator (ESP): NA

Type of ESP: Wet, Dry, Hot side, Cold side	Face velocity across the plates (ft/sec)	Total face surface area (ft^2)	Gas conditioning agent	Delay time between starting of system and ESP unit operation

Explain any delays:

5. Wet Collectors: NA

A. Scrubber type:

Pressure drop across scrubber inches of water	Flow rate (gpm)	Scrubbing liquor	Liquid to air ratio ($gpm/10^3$ acfm)	Is there a demister following the scrubber?

B. Settling Pond

Volume (ft^3)	Depth (ft)	Width (ft)	Length (ft)	Diameter (if circular) (ft)

6. Other pollution control equipment:

Dry Filter

7. Preventative Maintenance Plan*

Prepare a Preventative Maintenance Plan (PMP) for this pollution control system. The PMP must include the following: (check when completed)

X	Identification of the individual(s) responsible for inspecting, maintaining and repairing emission control devices.
X	Description of the items or conditions that will be inspected.
X	Schedule for inspection of items or conditions described above.
X	Identification and quantification of the replacement parts which will be maintained in inventory for quick replacement.
*	Preventative Maintenance Plan attached.

*Note: Preventative Maintenance Plan summary is included as part of Attachment 3. A detailed plan may be reviewed at the facility.

FACILITY/UNIT COMPLIANCE STATUS

1. Company Name: Arvin North American Automotive		
2. Source ID: 081-00020	3. Unit ID: CPB-1	4. S/V ID: S-PB1, 2

5. Citation	6. Description	7. State / Local only	8. Limitation	9. Test Method	10 In Comp. (y/n)
326 IAC 5-1	Opacity		40%	Method 9	Y
326 IAC 6-3	Process Weight		0.203 lb/hr	Method 5	Y
326 IAC 8-2-9	Metal Parts and Products Surface Coating		3.5 Lbs/gallon	Method 24	Y

11. Other requirements	S/L only	In comp (y/n)
None		

COMPLIANCE PLAN -- BY FACILITY/UNIT

1. Company Name: Arvin North American Automotive	
2. Source ID: 081-000020	3. Unit ID: CPB-1

4. Applicable Requirements

Rule or Regulation	Citation
Opacity	326 IAC 5-1
Process Weight	326 IAC 6-3
Metal Parts and Products Surface Coating	326 IAC 8-2-9

5. Limitations*

6. Monitoring*

Stack/Vent ID	Pollution Control Equip. (if applicable)	Monitoring Parameter	Monitoring Frequency

*Note: See Attachment 3 for Compliance Monitoring Plan

7. Record Keeping*

What will be Recorded?	Record Keeping Frequency

8. Testing*

Item from 5	Pollutants	Test Method	Testing Frequency

9. Reporting*

*Note: See Attachment 3 for Compliance Monitoring Plan

COMPLIANCE SCHEDULE

1. Company Name: Arvin North American Automotive		
2. Source ID: 081-00020	3. Unit ID: CPB-1	4. S/V ID: S-PB1, 2

5. For units (facilities) that are presently in compliance will all applicable requirements, including any enchanced monitoring and compliance certification requirements under section 114(a)(3) of the Clean Air Act that apply, complete the following.

We will continue to operate and maintain this unit (facility) in compliance with all applicable requirements.	X
FORM CD-01 includes new requirements that apply or will apply to this unit (facility) during the term of the permit. We will meet such requirements on a timely basis.	

6. For units (facilities) not presently fully in compliance, complete the following:

This unit (facility) is in compliance with all applicable requirements except for those indicated below. We will achieve compliance according to the following schedule:	NA

Applicable Requirement	Corrective Actions	Deadline
A.		
B.		
C.		

7. Progress Report Submission
Progress report submission start date: NA
Frequency of report submissions: NA

8. For sources that are subject to the requirements under section 112(r), Accidental Release Prevention. (See instructions before completing.)

NA	A Risk Management Plan (RMP) has been submitted to the Chemical Safety and Hazard Investigation Board, the U.S. EPA, the Indiana Department of Environmental Management, and any local agency responsible for permitting.
NA	A Risk Management Plan (RMP) has not been submitted to the Chemical Safety and Hazard Investigation Board, the U.S. EPA, the Indiana Department of Environmental Management, and any local agency responsible for permitting.
NA	A Risk Management Plan (RMP) is included with this application and has been / will be sent to the Chemical Safety and Hazard Identification Board, the U.S. EPA and appropriate local agency.

Date a RMP was or will be submitted:	NA

COMPLIANCE CERTIFICATION

Company Name: Arvin North American Automotive, Franklin
Source ID: 081-00020

Note: This form is completed once per application (not once for each emissions unit/facility) with respect to all applicable requirements at the source.

CERTIFICATION OF SOURCE COMPLIANCE STATUS (check one)

X	I hereby certify that, based on information and belief formed after reasonable inquiry, the source described in this air pollution control permit application is fully in compliance with all applicable requirements and will continue to comply with those requirements.
	I hereby certify that, based on information and belief formed after reasonable inquiry, the source described in this air pollution control permit application is fully in compliance with all applicable requirements, except for the following emissions unit(s) (facilities):

Unit Identification	Applicable Requirement

PERMIT TERM COMPLIANCE CERTIFICATION SCHEDULE

Date of first certification submittal:	One year after the Title V permit is issued
Frequency of future submittals: (at least annually)	Annually

SIGNATURE OF RESPONSIBLE OFFICIAL

Name (typed): Mr. James L. Stegemiller	
Title: Vice President GM Business Unit	
Signed: James L Stegemiller	Date: 12-5-96

SURFACE COATING AND ACCESSORY SOLVENTS (as APPLIED)

Unit ID: MPB-1	S/V ID: S-PB3, 4
Segment ID: NA	SCC #: NA

DESCRIBE THE PRODUCT YOU ARE COATING (door, screens, pipes, etc...): Automobile components
INDICATE THE MATERIAL YOU ARE COATING (wood, plastic, metal, etc...): Plastic, Metal

1. Name of Coatings, Solvents, etc.	2. ID Number	3. Material density	4. Weight % Volatiles (Water and Organics)	5. Weight % Water	6. Volume % Water	7. Volume % Non-volatiles (solids)	8. Gallons of Material* Required for One Production Unit Gal/Production Unit	9. Maximum Number of Production Units per Hour	10. Annual Coating Usage**
High Heat Aluminum Enamel	KB 0935-HSHH	10.655 lb/gal	32.8%	0	0	50.8%	0.004	112.5	240 gal.

* If more than one type of unit is coated in the same paint booth with the same coating, this amount should be based on the productoin unit requiring the most gallons per hour of material. If different coatings are used, they must be listed separately. Gallons per hour = Colums 9 x Column 9.

** 1995 Usage

Note: Attach a *Material Safety Data Sheet* (MSDS) and an EPA VOC Data Sheet for each material listed. DO NOT SEND THE ENTIRE MSDS. The required sections are: Product Identification, Hazardous Ingredients, and Physical characteristics information.

Density, Weight % Volatiles, and Weight % Water come from MSDS.

SURFACE COATING AND ACCESSORY SOLVENTS

1.	Application method [1]	Spray
2.	If sprayed, specify type [2]	Low Pressure - High Volume
3.	Type of Overspray controls [3]	Dry Filters
4.	Control Efficiency	90%
5.	Type of Hydrocarbon controls [4]	Use of Compliant Coatings
6.	Control Efficiency	NA
7.	Stack Height (feet above ground)	NA
8.	Stack Diameter (inches)	NA
9.	Exhaust flow rate (acfm)	NA
10.	Exhaust Discharge Temperature °F	NA

(1) Method of application refers to dipping, spraying, rollcoating, brushing, flow coating, or other.

(2) Types of spray coating include: air atomization, airless, electrostatic disc, electrostatic airless, electrostatic air atomized, low pressure air atomization, low pressure-high volume, or other.

(3) Overspray controls include: dry and wet filters, baffles, waterwash, or other.

(4) Hydrocarbon controls include: catalytic or direct flame incineration, solvent recovery, carbon adsorption, or other.

11. Potential to Emit:

Pollutant	Maximum rate (units/hr)	Emission Factor (lb/units)	Emission Rate (lb/hr)	Maximum Uncontrolled Emissions (tons/yr)	Pollution Control Efficiency (%)	Maximum Controlled Emissions (tons/yr)
PM	Not required based on IDEM "White Paper" Guidance					
PM10						
SO_2						
NO_x						
VOC						
CO						
Lead						

12. Source of Emission Factors:	NA

PARTICULATE CONTROL EQUIPMENT

Unit ID: MPB-1	S/V ID: S-PB3, 4

1. Additional information needed to complete calculations:

Gas or Air flow rate (acfm)	Grain loading/actual standard cubic foot of outlet air	Average gas temperature °F	Actual collection efficiency %
30,000	0.001	Ambient	90%

2. Cyclone: NA

Average Particulate size at the inlet (microns)			
Number of tubes		Tube diameter (inches)	

3. Baghouse: NA

Fabric material	Total filter area (ft^2)	Air to cloth ratio air flow ($ascfm/ft^2$)	Pressure drop across baghouse inches of water	Method of bag cleaning (i.e., shaking, jetpulse, etc.)

4. Electrostatic Precipitator (ESP): NA

Type of ESP: Wet, Dry, Hot side, Cold side	Face velocity across the plates (ft/sec)	Total face surface area (ft^2)	Gas conditioning agent	Delay time between starting of system and ESP unit operation

Explain any delays:

5. Wet Collectors: NA

A. Scrubber type:

Pressure drop across scrubber inches of water	Flow rate (gpm)	Scrubbing liquor	Liquid to air ratio ($gpm/10^3$ acfm)	Is there a demister following the scrubber?

B. Settling Pond				
Volume (ft^3)	Depth (ft)	Width (ft)	Length (ft)	Diameter (if circular) (ft)

6. Other pollution control equipment:

Dry Filter

7. Preventative Maintenance Plan*

Prepare a Preventative Maintenance Plan (PMP) for this pollution control system. The PMP must include the following: (check when completed)	
X	Identification of the individual(s) responsible for inspecting, maintaining and repairing emission control devices.
X	Description of the items or conditions that will be inspected.
X	Schedule for inspection of items or conditions described above.
X	Identification and quantification of the replacement parts which will be maintained in inventory for quick replacement.
*	Preventative Maintenance Plan attached.

*Note: Preventative Maintenance Plan summary is included as part of Attachment 3. A detailed plan may be reviewed at the facility.

FACILITY/UNIT COMPLIANCE STATUS

1. Company Name: Arvin North American Automotive		
2. Source ID: 081-00020	3. Unit ID: MPB-1	4. S/V ID: S-PB3, 4

5. Citation	6. Description	7. State / Local only	8. Limitation	9. Test Method	10. In Comp. (y/n)
326 IAC 5-1	Opacity		40%	Method 9	Y
326 IAC 6-3	Process Weight		0.072 lb/hr	Method 5	Y
326 IAC 8-2-9	Metal Parts and Products Surface Coating		3.5 Lbs/gallon	Method 24	Y

11. Other requirements	S/L only	In comp (y/n)
None		

COMPLIANCE PLAN -- BY FACILITY/UNIT

1. Company Name: Arvin North American Automotive	
2. Source ID: 081-000020	3. Unit ID: MPB-1

4. Applicable Requirements

Rule or Regulation	Citation
Opacity	326 IAC 5-1
Process Weight	326 IAC 6-3
Metal Parts and Products Surface Coating	326 IAC 8-2-9

5. Limitations*

6. Monitoring*

Stack/Vent ID	Pollution Control Equip. (if applicable)	Monitoring Parameter	Monitoring Frequency

*Note: See Attachment 3 for Compliance Monitoring Plan

7. Record Keeping*

What will be Recorded?	Record Keeping Frequency

8. Testing*

Item from 5	Pollutants	Test Method	Testing Frequency

9. Reporting*

*Note: See Attachment 3 for Compliance Monitoring Plan

COMPLIANCE SCHEDULE

1. Company Name: Arvin North American Automotive		
2. Source ID: 081-00020	3. Unit ID: MPB-1	4. S/V ID: S-PB3, 4

5. For units (facilities) that are presently in compliance will all applicable requirements, including any enchanced monitoring and compliance certification requirements under section 114(a)(3) of the Clean Air Act that apply, complete the following.

We will continue to operate and maintain this unit (facility) in compliance with all applicable requirements.	X
FORM CD-01 includes new requirements that apply or will apply to this unit (facility) during the term of the permit. We will meet such requirements on a timely basis.	

6. For units (facilities) not presently fully in compliance, complete the following:

This unit (facility) is in compliance with all applicable requirements except for those indicated below. We will achieve compliance according to the following schedule:	NA

Applicable Requirement	Corrective Actions	Deadline
A.		
B.		
C.		

7. Progress Report Submission
Progress report submission start date: NA
Frequency of report submissions: NA

8. For sources that are subject to the requirements under section 112(r), Accidental Release Prevention. (See instructions before completing.)

NA	A Risk Management Plan (RMP) has been submitted to the Chemical Safety and Hazard Investigation Board, the U.S. EPA, the Indiana Department of Environmental Management, and any local agency responsible for permitting.
NA	A Risk Management Plan (RMP) has not been submitted to the Chemical Safety and Hazard Investigation Board, the U.S. EPA, the Indiana Department of Environmental Management, and any local agency responsible for permitting.
NA	A Risk Management Plan (RMP) is included with this application and has been / will be sent to the Chemical Safety and Hazard Identification Board, the U.S. EPA and appropriate local agency.

Date a RMP was or will be submitted:	NA

COMBUSTION

Unit ID#: B-1	Stack ID#: S-B-1
Segment ID#: NA	SCC #: NA

1. Type of heating unit: Kewanee Boiler

2. Heat input rate (million Btu/hour)	3.6 MMBtu/hr

3. Combustion Process:

Pulverized - Dry Bottom		Spreader Stoker	
Pulverized - Wet Bottom		Traveling Grate	
Pulverized - Tangential		Fluidized	
Cyclone		Natural Gas	X

Fill out for each fuel and check not applicable if not used.

4. Fueled by coal: Not Applicable: X

Anthracite		Bituminous		Subbituminous		Lignite		Coke	

State of Origin	% Ash	% Sulfur	% Moisture (average)	Heating Btu/lb	Dry?	Moist?

5. Residual Oil: Not Applicable: X

Grade of residual oil used: No. 5, No. 6	% Sulfur	Heating Value Btu/gal	Firing: Normal or Tangential

6. Distillate Fuel: Not Applicable:

Grade of distillate fuel used: No. 1, No. 2, No. 4	% Sulfur	Heating Value Btu/gal	Firing: Normal or Tangential (No. 4 only)
No. 2	0.5%	140,000	NA

7. Natural Gas: Not Applicable:

Firing:	Normal	X	Tangential	

8. Process gas or landfill gas:		Not Applicable: X
Type of gas	% Sulfur	Heating Value Btu/ft^3

9. Liquidified petroleum gas:		Not Applicable: X
% Butane	% Propane	% Sulfur

10. Waste oil:					Not Applicable: X
% of heat provide by waste oil	Heating Value Btu/gal	% Ash	% Sulfur	% Chlorine	% Lead

11. Wood, wood waste, and/or bark:				Not Applicable: X
Wood or Wood Waste	Bark only	Wood and Bark	% Moisture	Heating Value Btu/ton

12. Liquid waste:					Not Applicable: X
% of heat provided by liquid waste	Heating Value Btu/gal	% Sulfur	% Chlorine	% Fluorine	Special or Hazardous Waste

13. Tires or tire derived fuel (TDF):							Not Applicable: X
Whole tires	Tire derived fuel	Heating Value Btu/lb	% heat supplied by tires/TDF	% Sulfur	% Chromium	% Chlorine	Type of combustion

14. Solid waste:			Not Applicable: X
% heat supplied by combustion of solid waste	Heating value of waste Btu/lb	Type of combustor	Special or Hazardous Waste

15.	Emission controls:	Not Applicable:	X

A.	Particulate Matter (check all applicable)						
None		Baghouse		Wet Scrubber		Electrostatic Precipitator	
	Other (specify)						

B.	SO_2 (check all applicable)
	None
	Scrubber (specify type)
	Other (specify)

C.	NO_x (check all applicable)		
None	Low NO_x Burners	Selective Catalytic reduction	Selective non-catalytic reduction
	Other (specify)		

D.	Acid Gas (check all applicable)
	None
	Packed Tower
	Scrubber (specify type)
	Other (specify)

16. For combustion units are boilers, fill out this section:

Date of installation	Pre-1989
Are any previously installed boilers present (Yes or No)	Yes

If yes, complete:

Identification	Heat Input Capacity	Date Installed	Permit # and/or Registration #
Natural Gas Cliff Boilers, B-2a, B-2b	3.6 MMBtu/hr	Pre-1989	081-2328
Natural Gas Johnston Boiler, B-3	2.7 MMBtu/hr	Pre-1989	081-2328
Natural Gas Cleaver Brooks Boiler, B-4	3.6 MMBtu/hr	Pre-1989	081-2328

Indicate any acceptable fuel consumption limitations	None

Stack Data should be indicated on FORM GSD-04, STACK/VENT INFORMATION
Provide additional sheets if necessary, label each sheet as FORM PI-02 and include unit 16. **Potential to Emit:**

Pollutant	Maximum rate (units/hr)	Emission Factor (lb/units)	Emission Rate (lb/hr)	Maximum Uncontrolled Emissions (tons/yr)	Pollution Control Efficiency (%)	Maximum Controlled Emissions (tons/yr)
PM	Not required based on IDEM "White Paper' Guidance					
PM10						
SO_2						
NO_x						
VOC						
CO						
Lead						

17	Source of Emission Factors:	NA

FACILITY/UNIT COMPLIANCE STATUS

1. Company Name: Arvin North American Automotive		
2. Source ID: 081-00020	3. Unit ID: B-1	4. S/V ID: S-B-1

5. Citation	6. Description	7. State / Local only	8. Limitation	9. Test Method	10. In Comp (y/n)
326 IAC 6-2-3	Indirect Heating		0.8 lb/MMBtu	None	Y

11. Other requirements	S/L only	In comp (y/n)
None		

COMPLIANCE PLAN -- BY FACILITY/UNIT

1. Company Name: Arvin North American Automotive	
2. Source ID: 081-00020	3. Unit ID: B-1

4. Applicable Requirements

Rule or Regulation	Citation
Indirect Heating	326 IAC 6-2-3

5. Limitations*

6. Monitoring*

Stack/Vent ID	Pollution Control Equip. (if applicable)	Monitoring Parameter	Monitoring Frequency

*Note: See Attachment 3 for Compliance Monitoring Plan.

7. Record Keeping*

What will be Recorded?	Record Keeping Frequency

8. Testing*

Item from 5.	Pollutants	Test Method	Testing Frequency

9. Reporting*

*Note: See Attachment 3 for Compliance Monitoring Plan.

COMPLIANCE SCHEDULE

1. Company Name: Arvin North American Automotive		
2. Source ID: 081-00020	3. Unit ID: B-1	4. S/V ID: S-B-1

5. For units (facilities) that are presently in compliance will all applicable requirements, including any enchanced monitoring and compliance certification requirements under section 114(a)(3) of the Clean Air Act that apply, complete the following.

We will continue to operate and maintain this unit (facility) in compliance with all applicable requirements.	X
FORM CD-01 includes new requirements that apply or will apply to this unit (facility) during the term of the permit. We will meet such requirements on a timely basis.	

6. For units (facilities) not presently fully in compliance, complete the following:

This unit (facility) is in compliance with all applicable requirements except for those indicated below. We will achieve compliance according to the following schedule:	NA

Applicable Requirement	Corrective Actions	Deadline
A.		
B.		
C.		

7. Progress Report Submission
Progress report submission start date: NA
Frequency of report submissions: NA

8. For sources that are subject to the requirements under section 112(r), Accidental Release Prevention. (See instructions before completing.)

NA	A Risk Management Plan (RMP) has been submitted to the Chemical Safety and Hazard Investigation Board, the U.S. EPA, the Indiana Department of Environmental Management, and any local agency responsible for permitting.
NA	A Risk Management Plan (RMP) has not been submitted to the Chemical Safety and Hazard Investigation Board, the U.S. EPA, the Indiana Department of Environmental Management, and any local agency responsible for permitting.
NA	A Risk Management Plan (RMP) is included with this application and has been / will be sent to the Chemical Safety and Hazard Identification Board, the U.S. EPA and appropriate local agency.

Date a RMP was or will be submitted:	NA

COMBUSTION

Unit ID#: B-2a, B-2b	Stack ID#: S-B-2
Segment ID#: NA	SCC #: NA

1. Type of heating unit: Two (2) Cliff Boilers

2. Heat input rate (million Btu/hour)	3.6 MMBtu/hr each

3. Combustion Process:

Pulverized - Dry Bottom		Spreader Stoker	
Pulverized - Wet Bottom		Traveling Grate	
Pulverized - Tangential		Fluidized	
Cyclone		Natural Gas	X

Fill out for each fuel and check not applicable if not used.

4. Fueled by coal: Not Applicable: X

Anthracite		Bituminous		Subbituminous		Lignite		Coke	

State of Origin	% Ash	% Sulfur	% Moisture (average)	Heating Btu/lb	Dry?	Moist?

5. Residual Oil: Not Applicable: X

Grade of residual oil used: No. 5, No. 6	% Sulfur	Heating Value Btu/gal	Firing: Normal or Tangential

6. Distillate Fuel: Not Applicable:

Grade of distillate fuel used: No. 1, No. 2, No. 4	% Sulfur	Heating Value Btu/gal	Firing: Normal or Tangential (No. 4 only)
No. 2	0.5%	140,000	NA

7. Natural Gas: Not Applicable:

Firing:	Normal	X	Tangential	

8. Process gas or landfill gas:		Not Applicable:	X
Type of gas	% Sulfur	Heating Value Btu/ft^3	

9. Liquidified petroleum gas:		Not Applicable:	X
% Butane	% Propane	% Sulfur	

10. Waste oil:				Not Applicable:	X
% of heat provide by waste oil	Heating Value Btu/gal	% Ash	% Sulfur	% Chlorine	% Lead

11. Wood, wood waste, and/or bark:			Not Applicable:	X
Wood or Wood Waste	Bark only	Wood and Bark	% Moisture	Heating Value Btu/ton

12. Liquid waste:				Not Applicable:	X
% of heat provided by liquid waste	Heating Value Btu/gal	% Sulfur	% Chlorine	% Fluorine	Special or Hazardous Waste

13. Tires or tire derived fuel (TDF):						Not Applicable:	X
Whole tires	Tire derived fuel	Heating Value Btu/lb	% heat supplied by tires/TDF	% Sulfur	% Chromium	% Chlorine	Type of combustion

14. Solid waste:			Not Applicable:	X
% heat supplied by combustion of solid waste	Heating value of waste Btu/lb	Type of combustor	Special or Hazardous Waste	

15.	Emission controls:	Not Applicable:	X

A. Particulate Matter (check all applicable)

None		Baghouse		Wet Scrubber		Electrostatic Precipitator	
	Other (specify)						

B. SO_2 (check all applicable)

	None	
	Scrubber (specify type)	
	Other (specify)	

C. NO_x (check all applicable)

None	Low NO_x Burners	Selective Catalytic reduction	Selective non-catalytic reduction
Other (specify)			

D. Acid Gas (check all applicable)

	None	
	Packed Tower	
	Scrubber (specify type)	
	Other (specify)	

16. For combustion units are boilers, fill out this section:

Date of installation	Pre-1989
Are any previously installed boilers present (Yes or No)	Yes

If yes, complete:

Identification	Heat Input Capacity	Date Installed	Permit # and/or Registration #
Natural Gas Kewannee Boiler, B-1	3.6 MMBtu/hr	Pre-1989	081-2328
Natural Gas Johnston Boiler, B-3	2.7 MMBtu/hr	Pre-1989	081-2328
Natural Gas Cleaver Brooks Boiler, B-4	11.7 MMBtu/hr	Pre-1989	081-2328

Indicate any acceptable fuel consumption limitations	None

Stack Data should be indicated on FORM GSD-04, STACK/VENT INFORMATION
Provide additional sheets if necessary, label each sheet as FORM PI-02 and include unit 16. **Potential to Emit:**

Pollutant	Maximum rate (units/hr)	Emission Factor (lb/units)	Emission Rate (lb/hr)	Maximum Uncontrolled Emissions (tons/yr)	Pollution Control Efficiency (%)	Maximum Controlled Emissions (tons/yr)
PM	Not required based on IDEM "White Paper' Guidance					
PM10						
SO_2						
NO_x						
VOC						
CO						
Lead						

17. Source of Emission Factors.	NA

FACILITY/UNIT COMPLIANCE STATUS

1. Company Name: Arvin North American Automotive		
2. Source ID: 081-00020	3. Unit ID: B-2a, B-2b	4. S/V ID: S-B-2

5. Citation	6. Description	7. State / Local only	8. Limitation	9. Test Method	10. In Comp (y/n)
326 IAC 6-2-3	Indirect Heating		0.8 lb/MMBtu	None	Y

11. Other requirements	S/L only	In comp (y/n)
None		

COMPLIANCE PLAN -- BY FACILITY/UNIT

1. Company Name: Arvin North American Automotive	
2. Source ID: 081-00020	3. Unit ID: B-2a, B-2b

4. Applicable Requirements

Rule or Regulation	Citation
Indirect Heating	326 IAC 6-2-3

5. Limitations*

6. Monitoring*

Stack/Vent ID	Pollution Control Equip. (if applicable)	Monitoring Parameter	Monitoring Frequency

*Note: See Attachment 3 for Compliance Monitoring Plan.

7. Record Keeping*

What will be Recorded?	Record Keeping Frequency

8. Testing*

Item from 5.	Pollutants	Test Method	Testing Frequency

9. Reporting*

*Note: See Attachment 3 for Compliance Monitoring Plan.

COMPLIANCE SCHEDULE

1. Company Name: Arvin North American Automotive		
2. Source ID: 081-00020	3. Unit ID: B-2a, B-2b	4. S/V ID: S-B-2

5. For units (facilities) that are presently in compliance will all applicable requirements, including any enchanced monitoring and compliance certification requirements under section 114(a)(3) of the Clean Air Act that apply, complete the following.

We will continue to operate and maintain this unit (facility) in compliance with all applicable requirements.	X
FORM CD-01 includes new requirements that apply or will apply to this unit (facility) during the term of the permit. We will meet such requirements on a timely basis.	

6. For units (facilities) not presently fully in compliance, complete the following:

This unit (facility) is in compliance with all applicable requirements except for those indicated below. We will achieve compliance according to the following schedule:	NA

Applicable Requirement	Corrective Actions	Deadline
A.		
B.		
C.		

7. Progress Report Submission
Progress report submission start date: NA
Frequency of report submissions: NA

8. For sources that are subject to the requirements under section 112(r), Accidental Release Prevention. (See instructions before completing.)

NA	A Risk Management Plan (RMP) has been submitted to the Chemical Safety and Hazard Investigation Board, the U.S. EPA, the Indiana Department of Environmental Management, and any local agency responsible for permitting.
NA	A Risk Management Plan (RMP) has not been submitted to the Chemical Safety and Hazard Investigation Board, the U.S. EPA, the Indiana Department of Environmental Management, and any local agency responsible for permitting.
NA	A Risk Management Plan (RMP) is included with this application and has been / will be sent to the Chemical Safety and Hazard Identification Board, the U.S. EPA and appropriate local agency.

Date a RMP was or will be submitted:	NA

COMBUSTION

Unit ID#: B-3	Stack ID#: S-B-3
Segment ID#: NA	SCC #: NA

1. Type of heating unit: Johnston Boiler

2. Heat input rate (million Btu/hour)	2.7 MMBtu/hr

3. Combustion Process:

Pulverized - Dry Bottom		Spreader Stoker	
Pulverized - Wet Bottom		Traveling Grate	
Pulverized - Tangential		Fluidized	
Cyclone		Natural Gas	X

Fill out for each fuel and check not applicable if not used.

4. Fueled by coal: Not Applicable: X

Anthracite		Bituminous		Subbituminous		Lignite		Coke	

State of Origin	% Ash	% Sulfur	% Moisture (average)	Heating Btu/lb	Dry?	Moist?

5. Residual Oil: Not Applicable: X

Grade of residual oil used: No. 5, No. 6	% Sulfur	Heating Value Btu/gal	Firing: Normal or Tangential

6. Distillate Fuel: Not Applicable:

Grade of distillate fuel used: No. 1, No. 2, No. 4	% Sulfur	Heating Value Btu/gal	Firing: Normal or Tangential (No. 4 only)
No. 2	0.5%	140,000	NA

7. Natural Gas: Not Applicable:

Firing:	Normal	X	Tangential	

8. Process gas or landfill gas:		Not Applicable: X
Type of gas	% Sulfur	Heating Value Btu/ft^3

9. Liquidified petroleum gas:		Not Applicable: X
% Butane	% Propane	% Sulfur

10. Waste oil:					Not Applicable: X
% of heat provide by waste oil	Heating Value Btu/gal	% Ash	% Sulfur	% Chlorine	% Lead

11. Wood, wood waste, and/or bark:				Not Applicable: X
Wood or Wood Waste	Bark only	Wood and Bark	% Moisture	Heating Value Btu/ton

12. Liquid waste:					Not Applicable: X
% of heat provided by liquid waste	Heating Value Btu/gal	% Sulfur	% Chlorine	% Fluorine	Special or Hazardous Waste

13. Tires or tire derived fuel (TDF):							Not Applicable: X
Whole tires	Tire derived fuel	Heating Value Btu/lb	% heat supplied by tires/TDF	% Sulfur	% Chromium	% Chlorine	Type of combustion

14. Solid waste:			Not Applicable: X
% heat supplied by combustion of solid waste	Heating value of waste Btu/lb	Type of combustor	Special or Hazardous Waste

15.	Emission controls:						Not Applicable:	X
A.	Particulate Matter (check all applicable)							
None		Baghouse		Wet Scrubber		Electrostatic Precipitator		
	Other (specify)							

B.	SO_2 (check all applicable)
	None
	Scrubber (specify type)
	Other (specify)

C.	NO_x (check all applicable)		
None	Low NO_x Burners	Selective Catalytic reduction	Selective non-catalytic reduction
	Other (specify)		

D.	Acid Gas (check all applicable)
	None
	Packed Tower
	Scrubber (specify type)
	Other (specify)

16. For combustion units are boilers, fill out this section:

Date of installation	Pre-1989
Are any previously installed boilers present (Yes or No)	Yes

If yes, complete:

Identification	Heat Input Capacity	Date Installed	Permit # and/or Registration #
Kewanee Boiler, B-1	3.6 MMBtu/hr	Pre-1989	081-2328
Cliff Boilers, B-2a, B-2b	3.6 MMBtu/hr	Pre-1989	081-2328
Cleaver Brooks Boiler, B-4	11.7 MMBtu/hr	Pre-1989	081-2328

Indicate any acceptable fuel consumption limitations	None

Stack Data should be indicated on FORM GSD-04, STACK/VENT INFORMATION
Provide additional sheets if necessary, label each sheet as FORM PI-02 and include unit 16. **Potential to Emit:**

Pollutant	Maximum rate (units/hr)	Emission Factor (lb/units)	Emission Rate (lb/hr)	Maximum Uncontrolled Emissions (tons/yr)	Pollution Control Efficiency (%)	Maximum Controlled Emissions (tons/yr)
PM	Not required based on IDEM "White Paper' Guidance					
PM10						
SO_2						
NO_x						
VOC						
CO						
Lead						

17. Source of Emission Factors:	NA

FACILITY/UNIT COMPLIANCE STATUS

1. Company Name: Arvin North American Automotive		
2. Source ID: 081-00020	3. Unit ID: B-3	4. S/V ID: S-B-3

5. Citation	6. Description	7. State / Local only	8. Limitation	9. Test Method	10. In Comp. (y/n)
326 IAC 6-2-3	Indirect Heating		0.8 lb/MMBtu	None	Y

11. Other requirements	S/L only	In comp (y/n)
None		

COMPLIANCE PLAN -- BY FACILITY/UNIT

1. Company Name: Arvin North American Automotive	
2. Source ID: 081-00020	3. Unit ID: B-3

4. Applicable Requirements

Rule or Regulation	Citation
Indirect Heating	326 IAC 6-2-3

5. Limitations*

6. Monitoring*

Stack/Vent ID	Pollution Control Equip. (if applicable)	Monitoring Parameter	Monitoring Frequency

*Note: See Attachment 3 for Compliance Monitoring Plan.

7. Record Keeping*

What will be Recorded?	Record Keeping Frequency

8. Testing*

Item from 5.	Pollutants	Test Method	Testing Frequency

9. Reporting*

*Note: See Attachment 3 for Compliance Monitoring Plan.

COMPLIANCE SCHEDULE

1. Company Name: Arvin North American Automotive		
2. Source ID: 081-00020	3. Unit ID: B-3	4. S/V ID: S-B-3

5. For units (facilities) that are presently in compliance will all applicable requirements, including any enchanced monitoring and compliance certification requirements under section 114(a)(3) of the Clean Air Act that apply, complete the following.

We will continue to operate and maintain this unit (facility) in compliance with all applicable requirements.	X
FORM CD-01 includes new requirements that apply or will apply to this unit (facility) during the term of the permit. We will meet such requirements on a timely basis.	

6. For units (facilities) not presently fully in compliance, complete the following:

This unit (facility) is in compliance with all applicable requirements except for those indicated below. We will achieve compliance according to the following schedule:	NA

Applicable Requirement	Corrective Actions	Deadline
A.		
B.		
C.		

7. Progress Report Submission
Progress report submission start date: NA
Frequency of report submissions: NA

8. For sources that are subject to the requirements under section 112(r), Accidental Release Prevention. (See instructions before completing.)

NA	A Risk Management Plan (RMP) has been submitted to the Chemical Safety and Hazard Investigation Board, the U.S. EPA, the Indiana Department of Environmental Management, and any local agency responsible for permitting.
NA	A Risk Management Plan (RMP) has not been submitted to the Chemical Safety and Hazard Investigation Board, the U.S. EPA, the Indiana Department of Environmental Management, and any local agency responsible for permitting.
NA	A Risk Management Plan (RMP) is included with this application and has been / will be sent to the Chemical Safety and Hazard Identification Board, the U.S. EPA and appropriate local agency.

Date a RMP was or will be submitted:	NA

COMBUSTION

Unit ID#: B-4	Stack ID#: S-B-4
Segment ID#: NA	SCC #: NA

1. Type of heating unit: Cleaver Brooks Boiler

2. Heat input rate (million Btu/hour)	11.7 MMBtu/hr

3. Combustion Process:

Pulverized - Dry Bottom		Spreader Stoker	
Pulverized - Wet Bottom		Traveling Grate	
Pulverized - Tangential		Fluidized	
Cyclone		Natural Gas	X

Fill out for each fuel and check not applicable if not used.

4. Fueled by coal: Not Applicable: X

Anthracite		Bituminous		Subbituminous		Lignite		Coke	

State of Origin	% Ash	% Sulfur	% Moisture (average)	Heating Btu/lb	Dry?	Moist?

5. Residual Oil: Not Applicable: X

Grade of residual oil used: No. 5, No. 6	% Sulfur	Heating Value Btu/gal	Firing: Normal or Tangential

6. Distillate Fuel: Not Applicable:

Grade of distillate fuel used: No. 1, No. 2, No. 4	% Sulfur	Heating Value Btu/gal	Firing: Normal or Tangential (No. 4 only)
No. 2	0.5%	140,000	NA

7. Natural Gas: Not Applicable:

Firing:	Normal	X	Tangential	

8. Process gas or landfill gas:		Not Applicable:	X
Type of gas	% Sulfur	Heating Value Btu/ft^3	

9. Liquidified petroleum gas:		Not Applicable:	X
% Butane	% Propane	% Sulfur	

10. Waste oil:				Not Applicable:	X
% of heat provide by waste oil	Heating Value Btu/gal	% Ash	% Sulfur	% Chlorine	% Lead

11. Wood, wood waste, and/or bark:			Not Applicable:	X
Wood or Wood Waste	Bark only	Wood and Bark	% Moisture	Heating Value Btu/ton

12. Liquid waste:				Not Applicable:	X
% of heat provided by liquid waste	Heating Value Btu/gal	% Sulfur	% Chlorine	% Fluorine	Special or Hazardous Waste

13. Tires or tire derived fuel (TDF):						Not Applicable:	X
Whole tires	Tire derived fuel	Heating Value Btu/lb	% heat supplied by tires/TDF	% Sulfur	% Chromium	% Chlorine	Type of combustion

14. Solid waste:			Not Applicable:	X
% heat supplied by combustion of solid waste	Heating value of waste Btu/lb	Type of combustor	Special or Hazardous Waste	

15.	Emission controls:	Not Applicable:	X

A. Particulate Matter (check all applicable)

None		Baghouse		Wet Scrubber		Electrostatic Precipitator	
	Other (specify)						

B. SO_2 (check all applicable)

	None	
	Scrubber (specify type)	
	Other (specify)	

C. NO_x (check all applicable)

None	Low NO_x Burners	Selective Catalytic reduction	Selective non-catalytic reduction
Other (specify)			

D. Acid Gas (check all applicable)

	None	
	Packed Tower	
	Scrubber (specify type)	
	Other (specify)	

16. For combustion units are boilers, fill out this section:

Date of installation	Pre-1989
Are any previously installed boilers present (Yes or No)	Yes

If yes, complete:

Identification	Heat Input Capacity	Date Installed	Permit # and/or Registration #
Kewanee Boiler, B-1	3.6 MMBtu/hr	Pre-1989	081-2328
Cliff Boilers, B-2a, B-2b	3.6 MMBtu/hr	Pre-1989	081-2328
Johnston Boiler, B-3	2.7 MMBtu/hr	Pre-1989	081-2328

Indicate any acceptable fuel consumption limitations	None

Stack Data should be indicated on FORM GSD-04, STACK/VENT INFORMATION
Provide additional sheets if necessary, label each sheet as FORM PI-02 and include unit 16. **Potential to Emit:**

Pollutant	Maximum rate (units/hr)	Emission Factor (lb/units)	Emission Rate (lb/hr)	Maximum Uncontrolled Emissions (tons/yr)	Pollution Control Efficiency (%)	Maximum Controlled Emissions (tons/yr)
PM	Not required based on IDEM "White Paper' Guidance					
PM10						
SO_2						
NO_x						
VOC						
CO						
Lead						

17. Source of Emission Factors:	NA

FACILITY/UNIT COMPLIANCE STATUS

1. Company Name: Arvin North American Automotive		
2. Source ID: 081-00020	3. Unit ID: B-4	4. S/V ID: S-B-4

5. Citation	6. Description	7. State / Local only	8. Limitation	9. Test Method	10. In Comp. (y/n)
326 IAC 6-2-3	Indirect Heating		0.8 lb/MMBtu	None	Y

11. Other requirements	S/L only	In comp (y/n)
None		

COMPLIANCE PLAN -- BY FACILITY/UNIT

1. Company Name: Arvin North American Automotive	
2. Source ID: 081-00020	3. Unit ID: B-4

4. Applicable Requirements

Rule or Regulation	Citation
Indirect Heating	326 IAC 6-2-3

5. Limitations*

6. Monitoring*

Stack/Vent ID	Pollution Control Equip. (if applicable)	Monitoring Parameter	Monitoring Frequency

*Note: See Attachment 3 for Compliance Monitoring Plan.

7. Record Keeping*

What will be Recorded?	Record Keeping Frequency

8. Testing*

Item from 5.	Pollutants	Test Method	Testing Frequency

9. Reporting*

*Note: See Attachment 3 for Compliance Monitoring Plan.

COMPLIANCE SCHEDULE

1. Company Name: Arvin North American Automotive		
2. Source ID: 081-00020	3. Unit ID: B-4	4. S/V ID: S-B-4

5. For units (facilities) that are presently in compliance will all applicable requirements, including any enchanced monitoring and compliance certification requirements under section 114(a)(3) of the Clean Air Act that apply, complete the following.

We will continue to operate and maintain this unit (facility) in compliance with all applicable requirements.	X
FORM CD-01 includes new requirements that apply or will apply to this unit (facility) during the term of the permit. We will meet such requirements on a timely basis.	

6. For units (facilities) not presently fully in compliance, complete the following:

This unit (facility) is in compliance with all applicable requirements except for those indicated below. We will achieve compliance according to the following schedule:	NA

Applicable Requirement	Corrective Actions	Deadline
A.		
B.		
C.		

7. Progress Report Submission
Progress report submission start date: NA
Frequency of report submissions: NA

8. For sources that are subject to the requirements under section 112(r), Accidental Release Prevention. (See instructions before completing.)

NA	A Risk Management Plan (RMP) has been submitted to the Chemical Safety and Hazard Investigation Board, the U.S. EPA, the Indiana Department of Environmental Management, and any local agency responsible for permitting.
NA	A Risk Management Plan (RMP) has not been submitted to the Chemical Safety and Hazard Investigation Board, the U.S. EPA, the Indiana Department of Environmental Management, and any local agency responsible for permitting.
NA	A Risk Management Plan (RMP) is included with this application and has been / will be sent to the Chemical Safety and Hazard Identification Board, the U.S. EPA and appropriate local agency.

Date a RMP was or will be submitted:	NA

CONSTRUCTION PERMIT

Control No. 02011

OFFICE OF AIR MANAGEMENT

INDIANA DEPARTMENT OF ENVIRONMENTAL MANAGEMENT
100 North Senate
P.O. Box 6015
Indianapolis, Indiana 46206-6015

ARVIN NORTH AMERICAN AUTOMOTIVE
1001 HURRICANE STREET
FRANKLIN, INDIANA

is hereby authorized to construct
and operate

Cadillac paint line that includes the following:

a) **one (1) spray paint booth with a rated capacity of 137 mufflers per hour. Type of spray coating includes electrostatic air atomized guns, with overspray controlled by the dry filters, exhausting to Stack S-2**

b) **one (1) natural gas-fired dry off oven with a rated capacity of 6.4 million Btu per hour of heat input, exhausting to Stack S-3, and,**

c) **three (3) natural gas-fired parts washer combustion units with a rated capacity of 1.5, 1.5, and 0.8 million Btu per hour of heat input to each gas burner, exhausting to Stack S-1**

THIS PERMIT IS ISSUED UNDER THE PROVISIONS OF 326 IAC 2-1 AND 40 CFR 52.780, WITH CONDITIONS LISTED ON THE ATTACHED PAGES.

Identification No. CP 081-4910
ID 005-00020

Expiration Date N/A

Date Issued April 3, 1996

Issued by [signature]
Commissioner

State Form 37080 R

Arvin North American Automotive
Franklin, Indiana
Permit Reviewer Name: Yogesh Parikh

CP No. 081 -4910
Plt ID No. 081 -00020

Construction Conditions

1. That the data and information supplied with the application shall be considered part of this permit. Prior to any proposed change in construction which may affect potential emissions, this change must be approved by the Office of Air Management (OAM).

2. That this permit to construct does not relieve the permittee of the possibility to comply with the provisions of the Indiana Department of Environmental Management Law (IC 13-7), Air Pollution Control Law (IC 13-1-1) and the rules promulgated thereunder, as well as other applicable local, state, and federal requirements.

3. That the equipment shall be installed in accordance with the manufacturer's specifications, and as stated in the application.

4. That pursuant to 326 IAC 2-1-9(b) the Commissioner may revoke this permit if construction is not commenced within eighteen (18) months after receipt of this approval or if construction is discontinued for a period of one (1) year or more.

5. That notwithstanding Condition No. 6, all requirements and conditions of this construction permit shall remain in effect unless modified consistent with procedures established for modifications of construction permits pursuant to 326 IAC 2.

6. That this document shall also become the first-time operation permit pursuant to 326 IAC 2-1-4 when, prior to start of operation, the following requirements are met:

   a. The attached affidavit shall be submitted to the Office of Air Management (OAM), verifying that the facilities were constructed as proposed in the application. If construction is done in phases; ie construction is not done continuously, one affidavit must be submitted for each phase of construction. Any permit conditions associated with operation start up dates such as stack testing for New Source Performance Standards (NSPS) shall be applicable to each individual phase.

   b. Permittee shall receive an Operation Permit Validation Letter from the Chief of the Air Compliance Section and attach it to this document.

   The first-time operation permit will be subject to annual operating permit fees pursuant to 326 IAC 2-1-7.1

   The permittee shall apply for an operation permit renewal at least ninety (90) days prior to the expiration date established in the validation letter.

7. That when the facility is constructed and placed into operation the following operation conditions shall be met:

Arvin North American Automotive
Franklin, Indiana
Permit Reviewer Name: Yogesh Parikh

CP No. 081 -4910
Plt ID No. 081 -00020

Operation Conditions

1. That the data and information supplied in the application shall be considered part of this permit. Prior to any change in the operation which may result in an increase in potential emissions exceeding those specified in 326 IAC 2-1-1, this change must be approved by the Office of Air Management (OAM).

2. That the permittee shall comply with the provisions of the Indiana Environmental Management Law (IC 13-7), Air Pollution Control Law (IC 13-1-1) and the rules promulgated thereunder.

3. That the equipment shall be operated and maintained in accordance with the manufacturer's specifications.

4. Pursuant to 326 IAC 8-2-9, the volatile organic compounds content of the coating applied to the muffler of the motor vehicle exhaust system shall be limited to 3.5 pounds per gallon of coating delivered to the applicator less water.

5. That the records of the quantity of VOC emitted from the permitted Cadillac paint line which includes a spray paint booth and the three stages parts washer with the dry off oven shall be maintained for a minimum period of 24 months and made available upon request of the Office Of Air Management. Any change or modification which may increase potential emissions from the spray paint booth, three stages parts washer and the dry off oven and the other equipment covered under this permit shall obtain a permit pursuant to 326 IAC 2-1.

6. That the particulate matter overspray from the surface coating facilities shall be considered in compliance with 326 IAC 6 provided that the overspray is not:

   a) visibly detectable at the exhaust and
   b) accumulated on the rooftops or on the ground.

7. Pursuant to 326 IAC 2-6-4 , the owner / operator shall submit an emission statement of the facility for VOC emissions.

   Office of Air Management
   Compliance Data Section
   Department of Environmental Management
   100 North Senate Avenue
   P.O. Box 6015
   Indianapolis, Indiana 46206-6015

   The submittal must be received by the Office of Air Management each year by April 15. The submittal must comply with the requirements contained in 326 IAC 2-6 and shall cover the latest twelve (12) consecutive month period starting December 1, and ending November 30.

Mail to: Permit Administration & Development Section
Office Of Air Management
100 North Senate Avenue
P. O. Box 6015
Indianapolis, Indiana 46206-6015

Arvin North American Automotive
1001 Hurricane Street
Franklin, Indiana 46131

Affidavit of Construction

I, ROBERT ELLIOTT being duly sworn upon my oath, depose and say:

1. I live in BARTHOLOMEW County, Indiana and being of sound mind and over the twenty -one (21) years of age, I am competent to give this affidavit.

2. I hold the position of FACILITY MGR. for ARVIN N.AMER.AUTO.

3. By virtue of my position with ARVIN N.A.A. I have personal knowledge of the representations contained in this affidavit and am authorized to make these representations on behalf of ARVIN N.A.A. - FRANKLIN

4. I hereby certify that Arvin North American Automotive,1001 Hurricane Street, Franklin, Indiana 46131, has constructed Cadillac Paint line with the spray paint booth, three (3) stage parts washer combustion units and the dry - off oven with the requirements and intent of the construction permit application received by the Office of Air Management on September 29,1995 as permitted pursuant to **Construction Permit No. CP- 081 - 4910, Plant ID No. 081 - 00020** issued on 4/3/96.

Further Affiant said not.

MAILED 4/8/96

I affirm under penalties of perjury that the representations contained in this affidavit are true, to the best of my information and belief.

Robert Elliott
Signature

ROBERT ELLIOTT
Name (typed or printed)

4/4/96
Date

STATE OF INDIANA)
)SS
COUNTY OF JOHNSON)

Subscribed and sworn to me, a notary public in and for MARION County and State of Indiana on this 4th day of April, 19 96.

My Commission expires: 5-15-98.

Mark Adolay
Signature

MARK J. ADOLAY
Name (typed or printed)

INDIANA DEPARTMENT OF ENVIRONMENTAL MANAGEMENT
We make Indiana a cleaner, healthier place to live

Evan Bayh
Governor
Kathy Prosser
Commissioner

105 South Meridian Street
P.O. Box 6015
Indianapolis, Indiana 46206-6015
Telephone 317-232-8603
Environmental Helpline 1-800-451-6027

November 6, 1992

Certified Mail P 255 206 848

Arvin North American Automotive
1531 13th Street
Columbus, IN 47201

For Franklin Plant
Mazda Paint Line

Attention: Douglas A. Logan

Re: Registered Construction
and Operation Status
CP 081-2328
ID 081-00020

Ladies and Gentlemen:

The Arvin North American Automotive application has been reviewed. Based on the data submitted and the provisions in Sections 1 and 2 of 326 IAC 2-1, it has been determined that the following, to be located at 1001 Hurricane Street in Franklin, Indiana is classified as registered:

a. two (2) natural gas fired Kewanee boilers each with a capacity of 3.6 MM Btu/hour,

b. two (2) natural gas fired Cliff boilers each with a capacity of 3.6 MM Btu/hour,

c. a natural gas fired Cleaverbrooks boiler with a capacity of 11.7 MM Btu/hour,

d. a natural gas fired Johnston boiler with a capacity of 2.7 MM Btu/hour,

e. a natural gas fired heater with a capacity of 0.8 MM Btu/hour for washing parts,

f. a natural gas fired bake oven with a capacity of 1.2 MM Btu/hour,

g. two (2) Binks paint booths with dry filters to control particulate matter,

h. a horizontal, 300 gallon capacity diesel fuel storage tank,

i. two (2) horizontal, 300 gallon capacity regular gasoline storage tanks,

j. a horizontal, 300 gallon capacity unleaded gasoline storage tank, and

k. a fixed roof, 58,753 gallon capacity No. 2 fuel oil storage tank.

Pursuant to 40 CFR 60.116b, the owner or operator of the 58,753 gallon storage vessel shall keep readily accessible records showing the dimensions of the storage vessels and an analysis showing the capacity of the storage vessel. These records shall be kept for the life of the source. The owner or operator of each storage vessel with a design capacity greater than or equal to 151 cubic meters storing a liquid with a maximum true vapor pressure that is normally less than 0.745 psia (5.2 kPa) shall notify the Administrator within 30 days when the maximum true vapor pressure of the liquid exceeds 0.745 psia (5.2 kPa).

Miscellaneous Metal Coating Operations, rule 326 IAC 8-2-9(d)(2), applies because the spray booths emit more than 15 lbs/day of Volatile Organic Compound (VOC) Emissions, therefore the company cannot discharge into the atmosphere volatile organic compounds in excess of 3.5 lbs of VOC/ gallon of coating excluding water. Records of the coating VOC content shall be maintained for 24 months and made available upon request to the office of Air Management.

Any change or modification which may increase the potential emissions to more than 25 tons per year of Volatile Organic Compound Emissions from the equipment covered in this letter must be approved by the Office of Air Management before such change may occur.

Sincerely,

Paul Dubenetzky

Paul Dubenetzky, Chief
Air Programs Branch
Office of Air Management

PAS

cc: Johnson County Health Department
Air Compliance Section
Enforcement Section - DD
Data Support Section

PERMIT - FRANKLIN / FILE

INDIANA DEPARTMENT OF ENVIRONMENTAL MANAGEMENT

We make Indiana a cleaner, healthier place to live

Evan Bayh
Governor
Kathy Prosser
Commissioner

100 North Senate Avenue
P.O. Box 6015
Indianapolis, Indiana 46206-6015
Telephone 317-232-8603
Environmental Helpline 1-800-451-6027

April 26, 1996

Mr. Robert Elliott
Arvin North American Automotive
1001 Hurricane Street
Franklin, Indiana 46131

Re: Operation Permit Validation
Construction Permit No. CP 081-4910
ID No. 081-00020

Dear Mr. Elliott:

The Office of Air Management (OAM) has received your Affidavit of Construction for the Cadillac Paint line with one (1) spray paint booth, one (1) natural gas-fired dry off oven and three (3) natural gas-fired parts washer combustion units located at 1001 Hurricane Street, Franklin, Indiana.

You are hereby authorized to operate the equipment as listed in Construction Permit No. CP 081-4910, ID No. 081-00020, pursuant to the operation permit conditions therein. This operation permit shall expire on April 25, 2001.

You will be billed for the applicable operating fee at a later date.

This authorization to operate does not terminate, dissolve or otherwise affect any appeal that may have been filed, or any stay of effectiveness that may have been issued with respect to the Construction Permit.

Sincerely,

Michael J. Worcel
for Barry Titus, Chief
Permit Administration Section
Office of Air Management

RECEIVED MAY 14 1996

BJT/kam
cc: File - Johnson County
D.J. Knotts
Janet Mobley
Donna Dickison
Michele Taylor
Kellie Metts

Franklin Permit

Certificate of Analysis

STMAX
THE FINISH THAT LASTS

WABASH PRODUCTS

CUSTOMER:	ARVIN AUTOMOTIVE, FRANKLIN
MATERIAL DESCRIPTION:	3.5 V.O.C. BLACK HI HEAT BAKING ENAMEL
CUSTOMER CODE NO.:	#980082-2
PURCHASE ORDER NO.:	211062
WABASH CODE NO.:	KB-0809-HSHH
QUANTITY:	15 GALLONS
BATCH NUMBER:	4A0043
WEIGHT PER GALLON:	11.79 LBS/GAL
VISCOSITY:	31 SEC #2 ZAHN CUP
% N.V. BY WEIGHT:	70.43
V.O.C. AS DETERMINED BY ASTM D2369-81:	3.48
#2 WEDGE CRYPTOMETER:	N/A
APPLICATION:	SPRAY
REDUCTION:	AS IS
SUBSTRATE:	409 STAINLESS
CURING CONDITIONS:	20 MIN @ 350°F
WET FILM THICKNESS:	N/A
DRY FILM THICKNESS:	1.40 MILS
GLOSS @ 60°:	65%
PENCIL HARDNESS:	N/A
SOLVENT RESISTANCE:	N/A
X-HATCH ADHESION TO SUBSTRATE:	100%
RECOAT AND/OR TOPCOAT ADHESION:	N/A
IMPACT:	N/A
MANDREL BEND:	N/A
WATER SOAK:	N/A
SALT SPRAY:	N/A
HUMIDITY:	N/A

PAINT BLACK PER GM9985384 WITH EXCEPTIONS.

Certified by:

MATERIAL SAFETY DATA SHEET FOR KB- 809HSHH

COMPLIES WITH OSHA STANDARD TITLE 29CFR1910.1200

HEALTH 2
FLAMMABILITY 3
REACTIVITY
PERSONAL
PROTECTION

FROM: WABASH PRODUCTS, TERRE HAUTE, IN
EMERGENCY TELEPHONE (800) 424-9300

TO: ARVIN AUTOMOTIVE #980082-2
FOR: WABASH PART NUMBER KB- 809HSHH
DESCRIPTION 3.5 VOC BLACK HI HEAT
TO:

MSDS DATE (YYMMDD) 961028
SEQUENCE # 961028999

***** 2. HAZARDOUS INGREDIENTS *****

COMMON NAME HAZARD TYPE	CAS NUMBER	EXPOSURE LIMITS	PPM	mg/M	LEL %	VAPOR PRES mm Hg @ 20°C
XYLENE FLAMMABLE	1330-20-7	PEL TLV	100 100		1.00	5.10
(4)NORM BUTL ALCOH FLAMMABLE	71-36-3	PEL TLV	100 50		1.39	4.40
N-BUTYL ALCOHOL IRRITANT	71-36-3	PEL TLV	100 50		1.39	4.30

***** 3. PHYSICAL DATA *****

APPEARANCE IS COLOR BLACK L/ PAINT DENSITY IS 11.6 LBS/GAL
VAPOR DENSITY (X) HEAVIER ( ) LIGHTER THEN AIR
EVAPORATION RATE IS (X) SLOWER ( ) FASTER THAN ETHER
BOILING RANGE FROM 243 TO 291 (DEG F)

**** 4. FIRE AND EXPLOSIVE HAZARD DATA ****

FLASH POINT (°F) CC 80 OSHA CLASS - FLAMMABLE LIQUID - CLASS 1C
UN NUMBER 1263 DOT CLASS - 3
LOWER EXPLOSIVE LIMIT (% BY VOLUME IN AIR) - 1.00
EXTINGUISHING MEDIA: Carbon dioxide or Dry Chemicals for small fires.
Foam for large fires.
CAUTION - Closed containers may build explosive pressure from heat.
Vapors are heavier then air and may travel along the ground or may be moved by ventilation and ignited by pilot lights,other flames,sparks heaters,smoking,electric motors,static discharge, or ignition sources at locations distant from material handling point.
NEVER USE WELDING OR CUTTING TOURCH ON OR NEAR DRUM (EVEN EMPTY) because product (or residue) can ignite explosively
SPECIAL FIRE FIGHTING PROCEDURE: cool closed containers with water spray.

HAZARDOUS DECOMPOSITION PRODUCTS: May form toxic materials:, Carbon Dioxide, Carbon Monoxide, Various Hydrocarbons, Etc.

Franklin
Cadillac Paint

***** 5. REACTIVITY DATA *****

STABILITY (X) STABLE ( ) UNSTABLE
HAZARDOUS POLYMERIZATION (X) WILL NOT OCCURE ( ) MAY OCCURE
HAZARDOUS DECOMPOSITION - FUMES MAY CONTAIN THE HAZARDOUS MATERIALS LISTED ABOVE.

CONDITIONS AND MATERIALS TO BE AVOIDED

Excess heat, sparks, and open flame

Avoid contact with strong oxidizing agents

Do NOT store or handle in aluminum equipment at temperatures over 120 deg. F.

**** 6. HEALTH HAZARD DATA ****

PRIMARY ROUTE OF ENTRY: (X) DERMAL (X) INHALATION ( ) INGESTION

Copper Chromite Black Spinel:

	OSHA PEL	ACHIH TLV	%
Copper dusts and mists(as CU)	1.0mg/m3	1.0mg/m3	30
Chromium III cpds (as Cr)	1.0mg/m3	0.5mg/m3	43

This pigment is the result of the high temperature calcination of the component sbbstances. due to its unique crystalline structure the properties of this finished pigment do not necessarily reflect the properties of the component metals or oxides.
Some compounds of the metals contained in this pigment copper and chromium III,have demonstrated various toxic properties. HOWEVER,there is NO EVIDENCE that this pigment has these toxic properties.

Effects of Overexposure: May cause mechanical irritation to eyes and respiratory tract.

Overexposure has been found to cause anemia, eye damage, kidney damage, liver abnormalities, and cardiac abnormality.

Aspiration of material into the lungs can cause chemical pneumonitis, which can be fatal.

EFFECTS OF OVEREXPOSURE: Eyes: Can cause severe irritation, redness, tearing, blurred vision. Skin: Prolonged or repeated contact can cause moderate irritation, defatting, dermatitis. Can be absorbed in toxic amounts, especially from prolonged or repeated exposure. Breathing: Excessive inhalation of vapors can cause nasal and respiratory irritation, dizziness, weakness, fatigue, nausea, headache, possible unconsciousness, and even asphyxiation. Swallowing: Can cause gastrointestinal irritation, nausea, vomiting, diarrhea.

Exposure can cause early to moderate CNS (Central Nervous System) depression. Symptoms are giddiness, headache, dizziness and nausea; in extreme cases, unconsciousness and death may occur. Aspiration Pneumonitis may be evidenced by caughing, labored breathing and cyanosis (bluish skin); in severe cases DEATH may result.

EFFECTS OF OVEREXPOSURE - EYES - Irritation, redness, tearing, blurred vision; SKIN - dryness,irritation,dermatitis; BREATHING - Nasal and respiratory irritation,dizziness,weakness, nausea,headache; SWALLOWING - nausea, vomiting,diarrhea. Aspiration of material into the lungs can cause chemical pneumonitis.

**** 7. SECTION 313 SUPPLIER NOTIFICATION ****

This product contains the following toxic chemicals subject to the reporting requirements of section 313 of the Emergency Planning and Community Right-To-Know Act of 1986 and of 40 CFR 372:

CAS #	CHEMICAL NAME		% BY WEIGHT
1330-20-7	XYLENE	Less then	30.0
68186-91-4	COPPER CHROMITE BLK SPIN	Less then	15.0
71-36-3	(4)NORM BUTL ALCOH	Less then	3.0
71-36-3	N-BUTYL ALCOHOL	Less then	3.0

This information must be included in all MSDSs that are copied and distributed for this material.

**** 8. FIRST AID AND EMERGENCY PROCEDURES ****

INHALATION: Remove to fresh air immeadiately. If breathing has stopped, give artificial respiration. Keep warm and quiet. Get medical attention immeadiately.
EYE Flush with large amounts of water, lifting upper and lower lids occasionally. Continue for at least 15 minutes. Get medical attention.
SKIN: Throughly wash exposed area with soap and water. Remove contaminated clothing. Launder contaminated clothing before re-use.
SWALLOWED: Do NOT induce vomiting, keep person warm, quiet, and get medical attention. Aspiration of material into the lungs due to vomiting can cause chemical pneumonitis which can be fatal.

**** 9. SPECIAL PROTECTION INFORMATION ****

RESPIRATORY PROTECTION: Use self contained breathing apparatus where concentrations may be above TLV limits. Below TLV limits, use a NIOSH approved vapor respirator.
VENTILATION: Local exhaust must be sufficient to keep airborne vapor concentration below the TLV limit.
PROTECTIVE GLOVES: Chemical resistant gloves.
EYE PROTECTION: Safety glasses with side shields.
OTHER PROTECTIVE EQUIPMENT: Eye bath and safety shower. To prevent repeated or prolonged skin contact, wear impervious clothing and boots.

***** 10. SPILL OR LEAK PROCEDURES *****

STEPS TO BE TAKEN IN CASE MATERIAL IS RELEASED OR SPILLED
Keep spectators away. Eliminate all ignition sources (flames, hot surfaces, and sources of electrical, static or frictional sparks). Dike and contain spill with inert material such as sand or earth. Transfer liquids to covere metal containers for recovery or disposal, or remove with inert absorbent. Use only non-sparking tools. place absorbent diking materials in covered metal containers for disposal. Prevent contamination of sewers, streams, an groundwater with spilled material or used absorbent.
WASTE DISPOSAL: Dispose of in accordance with federal, state and local laws Incinerate only in EPA permitted facility. Do NOT incinerate closed containers.

***** NOTE TO CUSTOMER *****

The law requires that you distribute this data to those people in your company who are involved in the use of this product.

The above information has been derived from information provided by our raw material suppliers and to our best knowledge and belief is factual.
No warranty is expressed or implied regarding the accuracy of this data or the results to be obtained from its use.

REMEMBER: it is the USERS obligation to determine the conditions of SAFE use of this product.

WABASH PRODUCTS COMPANY

MAZDA PAINT

STMAX
THE FINISH THAT LASTS

Phone (812) 232-6097
FAX (812) 232-6098

1600 HULMAN STREET
P.O. Box 3074

TERRE HAUTE, INDIANA 47803

WABASH PRODUCT NUMBER KB-0935-HSHH -

PRODUCT DESCRIPTION HIGH HEAT ALUMINUM 3.5 V.O.C BAKING ENAMEL

PHYSICAL PROPERTIES

WEIGHT PER GALLON	10.65 ± 0.10 LBS
% NV WEIGHT	67.2 ± 1
% NV VOLUME	50.8 ± 1
V.O.C.	3.5 LBS/GAL MAXIMUM
VISCOSITY AT 80°F	
#4 FORD CUP	
#4 ZAHN CUP	11-13 SECONDS
#2 ZAHN CUP	
STORMER KU	

APPLICATION AND CURE

APPLICATION METHOD CONVENTIONAL, AIRLESS OR ELECTROSTATIC SPRAY

SUBSTRATE SEE SPECIAL NOTE

PREPARATION CHEMICAL CLEANING EXTREMELY CLEAN SURFACE REQUIRED

CURE CONDITIONS

AIR	
TACK FREE	15-25 MINUTES
THRU DRY	2.5-3 HOURS
BAKING	
FLASH-OFF	
OVEN	
REDUCTION	NONE REQUIRED

SPECIFICATIONS

FILM THICKNESS	1.0 - 1.5 MILS
GLOSS @60°	N/A
HARDNESS	N/A
FLEXIBILITY	N/A
SOLVENT RESISTANCE	N/A
MANDREL BEND	N/A
X-HATCH ADHESION	ASTM D3359 (5)
RECOAT ADHESION	ASTM D3359 (5)
SALT SPRAY RESISTANCE	96 HRS
WATER SOAK	N/A
HUMIDITY	N/A
WEATHERING	N/A
OTHER	8 HOURS @ 750°F - NO CRACKING OR LOSS OF ADHESION

SPECIAL NOTES

1. THIS COATING IS NOT DESIGNED FOR USE OVER 409 STAINLESS STEEL.
2. MEETS REQUIREMENTS OF FORD SPEC. ESE-M2P24-A.

MANUFACTURERS OF

INDUSTRIAL FINISHES

ENAMELS - LACQUERS - HIGH TEMPERATURE FINISHES

MATERIAL SAFETY DATA SHEET FOR KB- 935HSHH

COMPLIES WITH OSHA STANDARD TITLE 29CFR1910.1200

HEALTH 2
FLAMMABILITY 3
REACTIVITY
PERSONAL PROTECTION

FROM: WABASH PRODUCTS, TERRE HAUTE, IN.
EMERGENCY TELEPHONE (800) 424-9300

TO: ARVIN AUTOMOTIVE
FOR: SENTRY PART NUMBER KB- 935HSHH
DESCRIPTION HIGH HEAT ALUMINUM
TO:

MSDS DATE (YYMMDD) 950522
SEQUENCE # 950522999

**** 1. HAZARDOUS INGREDIENTS ****

COMMON NAME HAZARD TYPE	CAS NUMBER	EXPOSURE LIMITS	PPM	mg/M	LEL %	VAPOR PRES mm Hg @ 20°C
(1) XYLENE FLAMMABLE	1330-20-7	PEL	100		1.00	5.10
		TLV	100			
(1) TOLUENE FLAMMABLE	108-88-3	PEL	200		1.19	3.80
		TLV	100			
(3) ISOPROPYL ALCOHOL FLAMMABLE	67-63-0	PEL	400		2.00	33.00
		TLV	400			

**** 2. PHYSICAL DATA ****

APPEARANCE IS COLOR SILVER PAINT DENSITY IS 10.6 LBS/GAL
VAPOR DENSITY (X) HEAVIER ( ) LIGHTER THEN AIR
EVAPORATION RATE IS (X) SLOWER ( ) FASTER THAN ETHER
BOILING RANGE NOT AVAILABLE

**** 3. FIRE AND EXPLOSIVE HAZARD DATA ****

FLASH POINT (°F) CC 42 OSHA CLASS - FLAMMABLE LIQUID - CLASS 1B
UN NUMBER 1263 DOT CLASS - 3
LOWER EXPLOSIVE LIMIT (% BY VOLUME IN AIR) - 1.00
EXTINGUISHING MEDIA: Carbon dioxide or Dry Chemicals for small fires.
Foam for large fires.
CAUTION - Closed containers may build explosive pressure from heat.
Vapors are heavier then air and may travel along the ground or may be moved by ventilation and ignited by pilot lights, other flames, sparks heaters, smoking, electric motors, static discharge, or ignition sources at locations distant from material handling point.
NEVER USE WELDING OR CUTTING TOURCH ON OR NEAR DRUM (EVEN EMPTY) because product (or residue) can ignite explosively
SPECIAL FIRE FIGHTING PROCEDURE: cool closed containers with water spray.

HAZARDOUS DECOMPOSITION PRODUCTS: May form toxic materials:, Carbon Dioxide, Carbon Monoxide, Various Hydrocarbons, Etc.

Carbon monoxide and carbon dioxide are products of combustion. Use appropriate respirator for protection against these chemicals.

**** 4. REACTIVITY DATA ****

STABILITY (X) STABLE ( ) UNSTABLE
HAZARDOUS POLYMERIZATION (X) WILL NOT OCCURE ( ) MAY OCCURE
HAZARDOUS DECOMPOSITION - FUMES MAY CONTAIN THE HAZARDOUS MATERIALS LISTED ABOVE.

CONDITIONS AND MATERIALS TO BE AVOIDED
Excess heat, sparks, and open flame

Avoid exposure to moisture, temperatures above 300 deg (F)

Avoid contact with strong oxidizing agents

Avoid strong oxidizers, open flames/sparks, aluminum metal , nitroform, oleum.

**** 5. HEALTH HAZARD DATA ****

PRIMARY ROUTE OF ENTRY: (X) DERMAL (X) INHALATION ( ) INGESTION

Overexposure has been found to cause anemia, eye damage, kidney damage, liver abnormalities, and cardiac abnormality.

Aspiration of material into the lungs can cause chemical pneumonitis, which can be fatal.

EFFECTS OF OVEREXPOSURE: Eyes: Can cause severe irritation, redness, tearing, blurred vision.' Skin: Prolonged or repeated contact can cause moderate irritation, defatting, dermatitis. Can be absorbed in toxic amounts, especially from prolonged or repeated exposure. Breathing: Excessive inhalation of vapors can cause nasal and respiratory irritation, dizziness, weakness, fatigue, nausea, headache, possible unconsciousness, and even asphyxiation. Swallowing: Can cause gastrointestinal irritation, nausea, vomiting, diarrhea.

Reports have associated repeated and prolonged occupational overexposure with permanent brain and nervous system damage. Intentional misuse by deliberately concentrating and inhaling the vapors may be harmful of fatal.

EFFECTS OF OVEREXPOSURE - EYES - Irritation, redness, tearing, blurred vision; SKIN - dryness,irritation,dermatitis; BREATHING - Nasal and respiratory irritation,dizziness,weakness, nausea,headache; SWALLOWING - nausea, vomiting,diarrhea. Aspiration of material into the lungs can cause chemical pneumonitis.

NOTE: This material can cause damage to developing fetus and can also be a severe eye irritant and mucous membrane irritant.

**** 6. ADDITIONAL COMMENTS ****

**** 7. SECTION 313 SUPPLIER NOTIFICATION ****

This product contains the following toxic chemicals subject to the reporting requirements of section 313 of the Emergency Planning and Community Right-To-Know Act of 1986 and of 40 CFR 372:

CAS #	CHEMICAL NAME	% BY WEIGHT
1330-20-7	(1) XYLENE	14.6
108-88-3	(1) TOLUENE	14.4
67-63-0	(3)ISOPROPYL ALCOHOL	3.9
7429-90-5	ALUMINUM METAL	11.5

This information must be included in all MSDSs that are copied and distributed for this material.

**** 8. FIRST AID AND EMERGENCY PROCEDURES ****

INHALATION: Remove to fresh air immeadiately. If breathing has stopped, give artificial respiration. Keep warm and quiet. Get medical attention immeadiately.
EYE Flush with large amounts of water, lifting upper and lower lids occasionally. Continue for at least 15 minutes. Get medical attention.
SKIN: Throughly wash exposed area with soap and water. Remove contaminated clothing. Launder contaminated clothing before re-use.
INGESTION: Do NOT induce vomiting, Keep person warm, quiet, and get medical attention. Aspiration of material into the lungs due to vomiting can cause chemical pneumonitis which can be fatal.

**** 9. SPECIAL PROTECTION INFORMATION ****

RESPIRATORY PROTECTION: Use self contained breathing apparatus where concentrations may be above TLV limits. Below TLV limits, use a NIOSH approved vapor respirator.
VENTILATION: Local exhaust must be sufficient to keep airborne vapor concentration below the TLV limit.
PROTECTIVE GLOVES: Chemical resistant gloves.
EYE PROTECTION: Safety glasses with side shields.
OTHER PROTECTIVE EQUIPMENT: Eye bath and safety shower. To prevent repeated or prolonged skin contact, wear impervious clothing and boots.

**** 10. SPILL OR LEAK PROCEDURES ****

STEPS TO BE TAKEN IN CASE MATERIAL IS RELEASED OR SPILLED
Keep spectators away. Eliminate all ignition sources (flames, hot surfaces, and sources of electrical, static or frictional sparks). Dike and contain spill with inert material such as sand or earth. Transfer liquids to covered metal containers for recovery or disposal, or remove with inert absorbent. Use only non-sparking tools. place absorbent diking materials in covered metal containers for disposal. Prevent contamination of sewers, streams, and groundwater with spilled material or used absorbent.
WASTE DISPOSAL: Dispose of in accordance with federal, state and local laws. Incinerate only in EPA permitted facility. Do NOT incinerate closed containers.

**** NOTE TO CUSTOMER ****

The law requires that you distribute this data to those people in your compony who are involved in the use of this product.

The above information has been derived from information provided by our raw material suppliers and to our best Knowledge and belief is factual.
No warranty is expressed or implied regarding the accuracy of this data or the results to be obtained from its use.

REMEMBER: it is the USERS obligation to determine the conditions of SAFE use of this product.

Cleaner for
Mazda Washer
Cadillac Washer

PARKER + AMCHEM

HENKEL CORPORATION
32100 Stephenson Hwy
Madison Heights, Michigan 48071

SEP 2 [illegible]

MATERIAL SAFETY DATA SHEET

DATE: 09/10/93 1414MR

I. MATERIAL IDENTIFICATION

PRODUCT TRADE NAME: TD-1414-MR

TECHNICAL CONTACT: Product Acceptance Office
TELEPHONE NUMBER: (313) 583-9300 EMERGENCY NUMBER: (800) 424-9300

II. HAZARDOUS INGREDIENTS

MATERIAL	CAS NO.	TLV/ACGIH	PEL/OSHA	% Weight
Sodium Hydroxide	01310-73-2	C2mg/m3	C2mg/m3	1 - 10
Sodium Metasilicate	06834-92-0	None	None	50 - 80
Tetrasodium Pyrophosphate	07722-88-5	5 mg/m^3	5 mg/m^3	1 - 10
Surfactants	N.A.	None	None	1 - 10

N.A. = CAS Number(s) not available.

EMERGENCY OVERVIEW: WHITE GRANULAR SOLID. CAUSES BURNS TO EYES AND SKIN. INHALATION CAUSES BURNS TO RESPIRATORY TRACT.

III. PHYSICAL PROPERTIES

APPEARANCE & ODOR: Off-white powder; no odor.
SPECIFIC GRAVITY: N/A
BOILING POINT F (C): N/A (N/A)
EVAPORATION RATE: N/A
pH: 14 (4% solution)
VAPOR DENSITY (AIR = 1): N/A
SOLUBILITY IN WATER: Appreciable
VAPOR PRESSURE: N/A
N/A = Not Applicable
N/D = Not Determined

IV. FIRE AND EXPLOSION HAZARDS

FLASH POINT F (C): N/A (N/a) METHOD USED: N/A
EXTINGUISHING MEDIA:
As required to extinguish surrounding fire.

SPECIAL FIRE FIGHTING PROCEDURES:
None.

UNUSUAL FIRE & EXPLOSION HAZARDS:
None.

V. REACTIVITY DATA

STABILITY:
Stable

CONDITIONS TO AVOID:
None Expected.

INCOMPATIBILITY (MATERIALS TO AVOID):
Keep separate from acids.
Water added to this chemical may cause localized overheating and splattering.

HAZARDOUS DECOMPOSITION:
None Expected.

HAZARDOUS POLYMERIZATION: Will Not Occur

VI. HEALTH HAZARD INFORMATION

EYES:
Contact with eyes will cause severe burn and possible blindness.

SKIN CONTACT:
Contact with skin or mucous membrane will cause severe burns and possible ulceration.

SKIN ABSORPTION:
None Expected.

INHALATION:
Inhalation of dust can cause injury (burns) to the entire respiratory tract.

Continued

INGESTION:
Can result in gastrointestinal damage; burns of the digestive tract.

CHRONIC EFFECTS:
None Expected.

MEDICAL CONDITIONS AGGRAVATED:
Pre-existing eye, skin and respiratory disorders.

OTHER:
No component of this chemical is listed in the NTP Annual Report on Carcinogens, IARC Monographs or is regulated as a carcinogen by OSHA.

VII. RECOMMENDED FIRST AID PROCEDURES

EYES:
Immediately flush eyes in a stream of water for at least 15 minutes while forcibly holding eyelids apart to ensure thorough rinsing of all eye and lid tissue. GET MEDICAL ATTENTION.

SKIN:
Immediately remove and discard contaminated clothing and shoes. Flush skin thoroughly with water for at least 15 minutes. If irritation persists, GET MEDICAL ATTENTION.

INHALATION:
Remove to fresh air and remove contaminated clothing. If breathing is difficult, administer oxygen. If respiration stops, give mouth to mouth resuscitation. GET MEDICAL ATTENTION.

INGESTION:
DO NOT INDUCE VOMITING. Drink large quantities of water. If vomiting occurs, drink more water. GET MEDICAL ATTENTION. Never give anything by mouth to an unconscious person.

VIII. PERSONAL PROTECTION

VENTILATION:
Provide sufficient mechanical (general and/or local exhaust) ventilation to maintain exposure below TLV(s).

RESPIRATORY PROTECTION:
MSHA/NIOSH dust filter mask or respirator if dusting occurs.

Continued

SKIN PROTECTION:
Chemical resistant gloves such as butyl rubber. Impervious protective clothing such as rubber aprons, boots should be used as necessary to prevent skin contact.

EYE PROTECTION:
Chemical goggles or face shield.

OTHER:
Eye wash facility and emergency shower should be in close proximity.

IX. SPILL PROCEDURES & WASTE DISPOSAL

SPILL PROCEDURES:

Wear respiratory protection.

Sweep up or otherwise collect and store in a suitable container.

WASTE TREATMENT:
Waste treatment and neutralization may be required prior to discharge to a sewer. Waste Treatment Information Bulletin No. 1007 available on request.

Dispose of in compliance with all applicable federal, state and local regulations.

X. STORAGE AND HANDLING PROCEDURES

SPECIAL PRECAUTIONS AND STORAGE:
Store away from acids.

DO NOT GET IN EYES, ON SKIN OR ON CLOTHING.

DO NOT BREATHE DUST.
For industrial use only.

NEVER ADD WATER TO PRODUCT. When making additions to a hot solution, add the chemical to cold water with stirring, cool or dilute and pour slowly into the hot solution while stirring the solution.

XI. DOT SHIPPING INFORMATION

Continued

PROPER SHIPPING NAME:
Effective September 13, 1993, the current HM-181 shipping information is listed on the product label.

XII. ADDITIONAL REGULATORY INFORMATION

SUPERFUND AMENDMENT AND REAUTHORIZATION ACT OF 1986 (SARA):
Section 302 Extremely Hazardous Substance: no

This product does not contain any chemicals subject to the reporting requirements of section 313, Title III of SARA, part 372.

TOXIC SUBSTANCES CONTROL ACT (TSCA):
Components of this product are listed on the TSCA Inventory.

XIII. OTHER INFORMATION

HAZARD RANKING	NFPA	HMIS
HEALTH	3 High	3 Serious
FIRE	0 Insignificant	0 Minimal
REACTIVITY	1 Slight	1 Slight
OTHER		

PREPARED BY: S. WHITNEY DATE: 09/10/93

Chemical Emergency Telephone 1-800-424-9300

Cadillac
2/27/95

PARKER + AMCHEM

HENKEL CORPORATION
32100 Stephenson Hwy
Madison Heights, Michigan 48071

MATERIAL SAFETY DATA SHEET

DATE: 11/03/93 235255

I. MATERIAL IDENTIFICATION

PRODUCT TRADE NAME: PARCO® CLEANER 319

TECHNICAL CONTACT: Product Acceptance Office
TELEPHONE NUMBER: (313) 583-9300 EMERGENCY NUMBER: (800) 424-9300

II. HAZARDOUS INGREDIENTS

MATERIAL	CAS NO.	TLV/ACGIH	PEL/OSHA	% Weight
Potassium Hydroxide	01310-58-3	C2 mg/m^3	C2 mg/m^3	10 - 30
Surfactants	N.A.	None	None	1 - 10

N.A. = CAS Number(s) not available.

EMERGENCY OVERVIEW: PALE YELLOW LIQUID. CONTACT WILL CAUSE EYE AND SKIN BURNS.

III. PHYSICAL PROPERTIES

APPEARANCE & ODOR: Pale yellow liquid; mild odor.
SPECIFIC GRAVITY: 1.2 - 1.3
BOILING POINT F (C): >212 (>99)
EVAPORATION RATE: N/D
pH: >13
VAPOR DENSITY (AIR = 1): N/D
SOLUBILITY IN WATER: Complete
VAPOR PRESSURE: N/D
N/A = Not Applicable
N/D = Not Determined

IV. FIRE AND EXPLOSION HAZARDS

FLASH POINT F (C): N/A (N/A) METHOD USED: N/A

Continued

EXTINGUISHING MEDIA:
As required to extinguish surrounding fire.

SPECIAL FIRE FIGHTING PROCEDURES:
None.

UNUSUAL FIRE & EXPLOSION HAZARDS:
None.

V. REACTIVITY DATA

STABILITY:
Stable
CONDITIONS TO AVOID:
None Expected.

INCOMPATIBILITY (MATERIALS TO AVOID):
Keep separate from acids.
Water added to this chemical may cause localized overheating and splattering.

HAZARDOUS DECOMPOSITION:
None Expected.

HAZARDOUS POLYMERIZATION: Will Not Occur

VI. HEALTH HAZARD INFORMATION

EYES:
Contact with eyes will cause severe burn and possible blindness.

SKIN CONTACT:
Contact with skin or mucous membrane will cause severe burns and possible ulceration.

SKIN ABSORPTION:
None Expected.

INHALATION:
Inhalation of mist can cause injury (burns) to the respiratory tract.

INGESTION:
Can result in gastrointestinal damage; burns of the digestive tract.

Continued

CHRONIC EFFECTS:
None Expected.

MEDICAL CONDITIONS AGGRAVATED:
Pre-existing eye, skin and respiratory disorders.

OTHER:
No component of this chemical is listed in the NTP Annual Report on Carcinogens, IARC Monographs or is regulated as a carcinogen by OSHA.

VII. RECOMMENDED FIRST AID PROCEDURES

EYES:
Immediately flush eyes in a stream of water for at least 15 minutes while forcibly holding eyelids apart to ensure thorough rinsing of all eye and lid tissue. GET MEDICAL ATTENTION.

SKIN:
Immediately remove and discard contaminated clothing and shoes. Flush skin thoroughly with water for at least 15 minutes. If irritation persists, GET MEDICAL ATTENTION.

INHALATION:
Remove to fresh air. If breathing is difficult, give oxygen. GET MEDICAL ATTENTION.

INGESTION:
DO NOT INDUCE VOMITING. Drink large quantities of water. If vomiting occurs, drink more water. GET MEDICAL ATTENTION. Never give anything by mouth to an unconscious person.

VIII. PERSONAL PROTECTION

VENTILATION:
Use with adequate ventilation to minimize employee exposure to any mist above permissible exposure limits.

RESPIRATORY PROTECTION:
Respiratory protection not required under normal use. Use NIOSH/MSHA-approved mist filter respirator for routine work purposes when exposure to mists exceed the permissible exposure limit.

SKIN PROTECTION:
Chemical resistant gloves such as butyl rubber. Impervious protective clothing such as rubber aprons, boots should be used as necessary to prevent skin contact.

Continued

EYE PROTECTION:
Chemical goggles or face shield.

OTHER:
Eye wash facility and emergency shower should be in close proximity.

IX. SPILL PROCEDURES & WASTE DISPOSAL

SPILL PROCEDURES:
Wear protective clothing.

Absorb or otherwise collect spill and store in polyethylene or polyethylene-lined steel container.

This chemical contains a chelating agent.

WASTE TREATMENT:

Hazardous Waste Characteristic: Corrosivity, Title 40, Code of Federal Regulations, 261.22, Hazardous Waste Number D002.

Waste treatment and neutralization may be required prior to discharge to a sewer. Waste Treatment Information Bulletin No. 1007 available on request.

Dispose of in compliance with all applicable federal, state and local regulations.

X. STORAGE AND HANDLING PROCEDURES

SPECIAL PRECAUTIONS AND STORAGE:
Store away from acids.

DO NOT GET IN EYES, ON SKIN OR ON CLOTHING.

Wash thoroughly after handling.

For industrial use only.

NEVER ADD WATER TO PRODUCT. When making additions to a hot solution, add the chemical to cold water with stirring, cool or dilute and pour slowly into the hot solution while stirring the solution.

XI. DOT SHIPPING INFORMATION

Continued

PROPER SHIPPING NAME:
Effective September 13, 1993, the current HM-181 shipping information is listed on the product label.

XII. ADDITIONAL REGULATORY INFORMATION

SUPERFUND AMENDMENT AND REAUTHORIZATION ACT OF 1986 (SARA):
Section 302 Extremely Hazardous Substance: no

This product does not contain any chemicals subject to the reporting requirements of section 313, Title III of SARA, part 372.

TOXIC SUBSTANCES CONTROL ACT (TSCA):
Components of this product are listed on the TSCA Inventory.

XIII. OTHER INFORMATION

HAZARD RANKING	NFPA	HMIS
HEALTH	3 High	3 Serious
FIRE	0 Insignificant	0 Minimal
REACTIVITY	1 Slight	1 Slight
OTHER		

PREPARED BY: S. WHITNEY SW DATE: 11/03/93

Chemical Emergency Telephone 1-800-424-9300

P.O. BOX [illegible]
PITTSBURGH, PA 15238
(412) 963-0949

MINERAL SPIRITS

MATERIAL SAFETY DATA SHEET

Mineral Spirits

E-Z PAINT THINNER

EMERGENCY CONTACT: FOR CHEMICAL EMERGENCY - SPILL, LEAK, FIRE, EXPOSURE, OR ACCIDENT, CALL CHEMTREC AT 1-800-424-9300, DAY OR NIGHT.

NFPA HAZARD RATING:
4-Extreme
3-High
2-Moderate
1-Slight
0-Insignificant

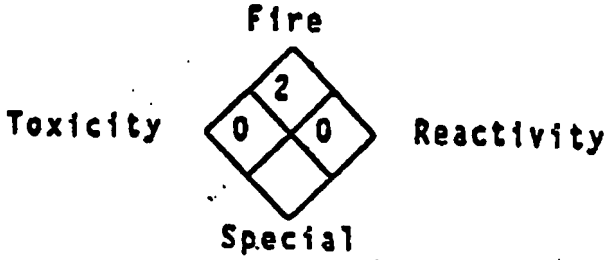

—CHEMICAL AND PHYSICAL PROPERTIES—

CHEMICAL NAME: Petroleum Hydrocarbon
FORMULA: Not applicable
HAZARDOUS DECOMPOSITION PRODUCTS: Carbon monoxide and carbon dioxide from burning.
INCOMPATIBILITY: Strong oxidizers such as hydrogen peroxide, bromine, and chromic acid.
TOXIC AND HAZARDOUS INGREDIENTS:
100% Stoddard solvent CAS # 8052-41-3
Contains insitu ingredient(s):
1,2,4 Trimethylbenzene CAS # 95-63-6
FORM: Liquid ODOR: Mild petroleum
APPEARANCE: Low viscosity liquid COLOR: Colorless
SPECIFIC GRAVITY (water=1): .77
BOILING POINT: Greater than 154 Deg. C (310 Deg. F)
MELTING POINT: Not applicable
SOLUBILITY IN WATER (by weight %): 0 at 20 Deg. C.
VOLATILE (by weight %): 100
EVAPORATION RATE: (n butyl acetate = 1): .2
VAPOR PRESSURE (mm Hg at 20 Deg. C): 3
VAPOR DENSITY (air=1): 4.85
pH (as is): Not applicable
STABILITY: Product is stable under normal conditions
VISCOSITY SUS AT 100 DEG. F: Less than 100

—FIRE AND EXPLOSION DATA—

SPECIAL FIRE FIGHTING PROCEDURES: Do not use water except as fog.
UNUSUAL FIRE AND EXPLOSION HAZARDS: Avoid all ignition sources such as flames and sparks.
FLASH POINT:(Method Used) Tag closed-cup 43 Deg C (110 Deg F)
FLAMMABLE LIMITS %: Lower: 1 Upper: 7
EXTINGUISHING AGENTS: Dry chemical or water fog or C02 or foam. Closed containers exposed to fire may be cooled with water.

—HEALTH HAZARD DATA—

PERMISSIBLE CONCENTRATIONS (air):
Stoddard solvent (CAS# 8052-41-3): 100ppm, 525 mg/m3 (OSHA/ACGIH)
Trimethylbenzene: 25 ppm, 125 mg/m3 (OSHA/ACGIH)
CHRONIC EFFECTS OF OVEREXPOSURE: No data available
ACUTE TOXICOLOGICAL PROPERTIES: For stoddard solvent: inhalation-irritation of eyes, nose and throat, dizziness; skin contact-dermatitis; eyes-irritation; ingestion-nausea, vomiting. Large amounts, if retained, lead to symptoms of central nervous system depression.

MSDS # 2 of 4

EMERGENCY FIRST AID PROCEDURES:
EYES: Immediately flush with large quantities of water for at least 15 minutes and call a physician.
SKIN CONTACT: Remove excess with cloth or paper. Wash thoroughly with soap and water.
INHALATION: Remove victim to fresh air. Call a physician.
IF SWALLOWED: Call a physician immediately. DO NOT induce vomiting. (Vomiting may cause aspiration into lungs resulting in chemical pneumonia.)
ROUTES OF ENTRY: Inhalation, skin/eye contact, ingestion
TARGET ORGAN(S): Respiratory system, central nervous system, skin and eyes
MEDICAL CONDITIONS AGGRAVATED BY EXPOSURE: Pre-existing eye, skin and respiratory disorders.

—SPECIAL PROTECTION INFORMATION—

VENTILATION TYPE REQUIRED (Local, mechanical, special): Local if necessary to maintain allowable PEL (permissible exposure limit) or TLV (threshold limit value)
RESPIRATORY PROTECTION (Specify type): Use NIOSH/MSHA certified respirator with dual organic vapor/mist and particulates cartridge if vapor concentration exceeds permissible exposure limit.
PROTECTIVE GLOVES: Neoprene type
EYE PROTECTION: Chemical safety goggles
OTHER PROTECTIVE EQUIPMENT: None

—HANDLING OF SPILLS OR LEAKS—

PROCEDURES FOR CLEAN-UP: Avoid all ignition sources such as flames and sparks. Insure good ventilation. If volume is significant, transfer into containers for disposal. Seal containers tightly. Absorb on an inert ingredient such as earth, sand or vermiculite. Sweep up and dispose of according to Federal, State and local regulations.
WASTE DISPOSAL: Dispose of in accordance with all applicable federal, state, and local regulations.

—SPECIAL PRECAUTIONS—

PRECAUTIONS TO BE TAKEN IN HANDLING AND STORAGE: Avoid all ignition sources such as flames and sparks. Do not handle or store at temperatures over
MAXIMUM STORAGE TEMPERATURE: 38 Deg. C (100 Deg. F)

—TRANSPORTATION DATA—

D.O.T.: Regulated
U.S. D.O.T. PROPER SHIPPING NAME: Combustible liquid, n.o.s. (stoddard solvent)
U.S. D.O.T. HAZARD CLASS: Combustible Liquid
I.D. NUMBER: NA 1993, PGIII, ERG #27
LABEL(S) REQUIRED: None
REPORTABLE QUANTITY: None
FREIGHT CLASSIFICATION: Stoddard solvent-Combustible Liquid
SPECIAL TRANSPORTATION NOTES:
DOMESTIC: Unregulated by DOT when shipped in containers of less than 118.9 gallons.
For Export: regulated as petroleum naphtha, n.o.s. (stoddard solvent), 3.3 UN 1255, PG III, category A, IMDG 3375

—ENVIRONMENTAL/SAFETY REGULATIONS—

SECTION 313 (TITLE III SUPERFUND AMENDMENT AND REAUTHORIZATION ACT): This product contains the following chemical(s) subject to the reporting requirements of Section 313 of Title III of the Superfund Amendments and Reauthorization Act of 1986 and 40 CFR Part 372 (the corresponding CAS number and percent by weight are also provided):
1,2,4 trimethyl benzene CAS # 95-63-6 2.67%

#3 of 4

—COMMENTS—

STATE REGULATORY INFORMATION: PENNSYLVANIA WORKER AND COMMUNITY RIGHT TO KNOW ACT:
This product contains the following ingredient(s) listed in Appendix A Hazardous Substance List:

Component	CAS No.
Stoddard solvent	8052-41-3

—LABEL INFORMATION—

CAUTION! COMBUSTIBLE MIXTURE. Contains Stoddard Solvent - CAS No. 8052-41-3. A hydrocarbon solvent useful for parts cleaning baths. Use wherever a Stoddard Solvent or Mineral Spirits is recommended. If used as a paint thinner, slower drying time would result. Paint Thinner/Mineral Spirits does not contain any chlorinated solvent. Use adequate ventilation to insure that fumes do not come in contact with sources of ignition such as flames and sparks. Avoid prolonged breathing of mist or vapors and prolonged or repeated skin contact. Use NIOSH/OSHA approved respirator, and chemical splash goggles to prevent eye contact.

EMERGENCY FIRST AID PROCEDURES:
EYE CONTACT-Flush immediately with large amounts of water for at least 15 minutes. Call physician.
SKIN CONTACT-Remove excess with cloth or paper. Wash thoroughly with soap and water.
INHALATION-Remove victim to fresh air. Call a physician. The OSHA permissible exposure limit for stoddard solvent is 100 ppm.
IF SWALLOWED: Do not induce vomiting. Call a physician immediately.

WE BELIEVE THE STATEMENTS, TECHNICAL INFORMATION AND RECOMMENDATIONS CONTAINED HEREIN ARE RELIABLE, BUT THEY ARE GIVEN WITHOUT WARRANTY OR GUARANTEE OF ANY KIND, EXPRESS OR IMPLIED, AND WE ASSUME NO RESPONSIBILITY FOR ANY LOSS, DAMAGE, OR EXPENSE, DIRECT OR CONSEQUENTIAL, ARISING OUT OF THEIR USE.

MSDS DATE: 8/26/92

MATERIAL SAFETY DATA SHEET

EXXON CHEMICAL AMERICAS
A Division of EXXON CHEMICAL COMPANY, A Division of EXXON CORPORATION

AROMATIC 100 SOLVENT

DATE PREPARED: SEP 17, 1995
MSDS NO.: 92940652

SECTION 1 CHEMICAL PRODUCT AND COMPANY IDENTIFICATION

PRODUCT NAME: AROMATIC 100 Solvent
CHEMICAL NAME:
Aromatic Hydrocarbon
CAS 64742-95-6
CHEMICAL FAMILY:
Petroleum Hydrocarbon
PRODUCT DESCRIPTION:
Clear colorless liquid.

CONTACT ADDRESS:
EXXON CHEMICAL AMERICAS
P.O. BOX 3272, HOUSTON, TEXAS 77253-3272

South Central Home Decorating
2675 N. National Road
Columbus, Indiana 47201
(812) 372-1878

** EMERGENCY TELEPHONE NUMBERS: (24 Hours) **
** CHEMTREC (800) 424-9300 **
** EXXON CHEMICAL AMERICAS (800) 726-2015 **

NON EMERGENCY TELEPHONE NUMBERS : (8am-5pm M-F)
FOR HEALTH AND SAFETY INFORMATION CALL : (713) 870-6884
FOR GENERAL PRODUCT INFORMATION CALL : (713) 870-6000

SECTION 2 COMPOSITION/INFORMATION ON INGREDIENTS

The composition of this mixture may be proprietary information. In the event of a medical emergency, compositional information will be provided to a physician or nurse. This product is hazardous as defined in 29 CFR1910.1200, based on the following compositional information:

OSHA HAZARD	COMPONENT
Combustible	Petroleum Hydrocarbons
OSHA PEL;ACGIH TLV	Trimethylbenzene
OSHA PEL;ACGIH TLV	Xylene
OSHA PEL;ACGIH TLV	Cumene
OSHA PEL;ACGIH TLV	Ethylbenzene

SECTION 3 HAZARDS IDENTIFICATION

POTENTIAL HEALTH EFFECTS

EYE CONTACT:
Slightly irritating but does not injure eye tissue.

SKIN CONTACT:
Frequent or prolonged contact may irritate and cause dermatitis.
Low order of toxicity.
Skin contact may aggravate an existing dermatitis condition.

INHALATION:
High vapor/aerosol concentrations (greater than approximately 1000 ppm) are irritating to the eyes and the respiratory tract, may cause headaches, dizziness, anesthesia, drowsiness, unconsciousness, and other central nervous system effects, including death.

INGESTION:
Small amounts of this product aspirated into the respiratory system during ingestion or vomiting may cause mild to severe pulmonary injury, possibly progressing to death.

Continues on page 2

Minimal toxicity.

SECTION 4 FIRST AID MEASURES

EYE CONTACT:
Flush eyes with large amounts of water until irritation subsides. If irritation persists, get medical attention.

SKIN CONTACT:
Flush with large amounts of water; use soap if available.
Remove grossly contaminated clothing, including shoes, and launder before reuse.

INHALATION:
Using proper respiratory protection, immediately remove the affected victim from exposure. Administer artificial respiration if breathing is stopped. Keep at rest. Call for prompt medical attention.

INGESTION:
If swallowed, DO NOT induce vomiting. Keep at rest. Get prompt medical attention.

SECTION 5 FIRE-FIGHTING MEASURES

FLASHPOINT: 108 Deg F. METHOD: TCC NOTE: Minimum
FLAMMABLE LIMITS: LEL: 1.9 UEL: 12.6 @ 77 Deg F. NOTE: Approximate
AUTOIGNITION TEMPERATURE: 880 Deg F. NOTE: Approximate

GENERAL HAZARD
Combustible Liquid, can form combustible mixtures at temperatures at or above the flashpoint.
Static Discharge, material can accumulate static charges which can cause an incendiary electrical discharge .
"Empty" containers retain product residue (liquid and/or vapor) and can be dangerous. DO NOT PRESSURIZE, CUT, WELD, BRAZE, SOLDER, DRILL, GRIND, OR EXPOSE SUCH CONTAINERS TO HEAT, FLAME, SPARKS, STATIC ELECTRICITY, OR OTHER SOURCES OF IGNITION; THEY MAY EXPLODE AND CAUSE INJURY OR DEATH.
Empty drums should be completely drained, properly bunged and promptly returned to a drum reconditioner, or properly disposed of.

FIRE FIGHTING
Use water spray to cool fire exposed surfaces and to protect personnel.
Isolate "fuel" supply from fire.
Use foam, dry chemical, or water spray to extinguish fire.
Avoid spraying water directly into storage containers due to danger of boilover.
This liquid is volatile and gives off invisible vapors. Either the liquid or vapor may settle in low areas or travel some distance along the ground or surface to ignition sources where they may ignite or explode.

DECOMPOSITION PRODUCTS UNDER FIRE CONDITIONS
No Unusual

SECTION 6 ACCIDENTAL RELEASE MEASURES

LAND SPILL
Eliminate sources of ignition. Prevent additional discharge of material, if possible to do so without hazard. For small spills implement cleanup procedures; for large spills implement cleanup procedures and, if in

Continues on page 3

public area, keep public away and advise authorities. Also, if this product is subject to CERCLA reporting (see Section 15 REGULATORY INFORMATION) notify the National Response Center.
Prevent liquid from entering sewers, watercourses, or low areas. Contain spilled liquid with sand or earth. Do not use combustible materials such as sawdust.
Recover by pumping (use an explosion proof or hand pump) or with a suitable absorbent.
Consult an expert on disposal of recovered material and ensure conformity to local disposal regulations.

WATER SPILL

Eliminate sources of ignition. Warn occupants and shipping in surrounding and downwind areas of fire and explosion hazard and request all to stay clear.
Remove from surface by skimming or with suitable adsorbents. If allowed by local authorities and environmental agencies, sinking and/or suitable dispersants may be used in non-confined waters.
Consult an expert on disposal of recovered material and ensure conformity to local disposal regulations.

SECTION 7 STORAGE AND HANDLING

ELECTROSTATIC ACCUMULATION HAZARD:
Yes, use proper grounding procedure

STORAGE TEMPERATURE, °F:
Ambient

LOADING/UNLOADING TEMPERATURE, °F:
Ambient

STORAGE/TRANSPORT PRESSURE, mmHg:
Atmospheric

LOADING/UNLOADING VISCOSITY, cSt:
0.9

STORAGE AND HANDLING:

Keep container closed. Handle and open containers with care.
Store in a cool, well ventilated place away from incompatible materials.
Do NOT handle or store near an open flame, heat or other sources of ignition. Protect material from direct sunlight.
Material will accumulate static charges which may cause an electrical spark (ignition source). Use proper grounding procedures.
Do NOT pressurize, cut, heat, or weld containers. Empty product containers may contain product residue. Do NOT reuse empty containers without commercial cleaning or reconditioning.

SECTION 8 EXPOSURE CONTROLS/PERSONAL PROTECTION

EXPOSURE CONTROLS

The use of local exhaust ventilation is recommended to control process emissions near the source. Laboratory samples should be stored and handled in a lab hood. Provide mechanical ventilation of confined spaces. See respiratory protection recommendations.

PERSONAL PROTECTION

For open systems where contact is likely, wear safety glasses with side shields, long sleeves, and chemical resistant gloves.
Where contact may occur, wear safety glasses with side shields.
Where concentrations in air may exceed the limits given in this Section and engineering, work practice or other means of exposure reduction are not adequate, NIOSH/MSHA approved respirators may

Continues on page 4

be necessary to prevent overexposure by inhalation.

WORKPLACE EXPOSURE GUIDELINES

OSHA REGULATION 29CFR1910.1000 REQUIRES THE FOLLOWING PERMISSIBLE EXPOSURE LIMITS:

A TWA of 25 ppm (125 mg/m3) for Trimethyl Benzene.
A TWA of 100 ppm (435 mg/m3) and a STEL of 150 ppm (655 mg/m3) for Xylenes.
A TWA of 50 ppm (245 mg/m3) for Cumene (skin).
A TWA of 100 ppm (435 mg/m3) and a STEL of 125 ppm (545 mg/m3) for Ethyl Benzene.
The recommended permissible exposure levels indicated above reflect the levels revised by OSHA in 1989 or in subsequent regulatory activity. Although the 1989 levels have since been vacated by the 11th Circuit Court of Appeals, Exxon Chemical recommends that the lower exposure levels be observed as reasonable worker protection.

THE ACGIH RECOMMENDS THE FOLLOWING THRESHOLD LIMIT VALUES:

a TWA of 25 ppm (123 mg/m3) for Trimethyl Benzene.
A TWA of 100 ppm (434 mg/m3), and a STEL of 150 ppm (651 mg/m3) for Xylene .
a TWA of 50 ppm (246 mg/m3) for Cumene (skin).
a TWA of 100 ppm (434 mg/m3), and a STEL of 125 ppm (543 mg/m3) for Ethyl Benzene.

EXXON RECOMMENDS THE FOLLOWING OCCUPATIONAL EXPOSURE LIMITS:

50 ppm total hydrocarbon based on composition.

SECTION 9 PHYSICAL AND CHEMICAL PROPERTIES

SPECIFIC GRAVITY, at °F:
0.87 at 60

DENSITY at °F: 7.3 lbs/gal at 59

SOLUBILITY IN WATER, wt. % at °F:
0.02 at 77 Calculated

SP. GRAV. OF VAPOR, at 1 atm (Air=1):
4.20

EVAPORATION RATE, n-Bu Acetate=1:
0.3 Approximate

VAPOR PRESSURE, mmHg at °F:
11 at 100 Approximate
4 at 68 Approximate

VISCOSITY OF LIQUID, cSt at °F:
0.9 at 77 Approximate

FREEZING/MELTING POINT, °F:
-76

BOILING POINT, °F:
318 to 338

SECTION 10 STABILITY AND REACTIVITY

STABILITY:
Stable

CONDITIONS TO AVOID INSTABILITY:
Not Applicable

HAZARDOUS POLYMERIZATION:
Will not occur

CONDITIONS TO AVOID HAZARDOUS POLYMERIZATION:
Not Applicable

MATERIALS AND CONDITIONS TO AVOID INCOMPATIBILITY:
Nitric acid, sulfuric acid, strong oxidizing agents.

HAZARDOUS DECOMPOSITION PRODUCTS:
None

Continues on page 5

SECTION 11 TOXICOLOGICAL INFORMATION

Please refer to Section 3 for available information on potential health effects.

SECTION 12 ECOLOGICAL INFORMATION

No specific ecological data are available for this product. Please refer to Section 6 for information regarding accidental releases and Section 15 for regulatory reporting information.

SECTION 13 DISPOSAL CONSIDERATIONS

Please refer to Sections 5, 6, and 15 for disposal and regulatory information.

SECTION 14 TRANSPORT INFORMATION

DEPARTMENT OF TRANSPORTATION (DOT):

DOT SHIPPING DESCRIPTION: PETROLEUM DISTILLATE, N.O.S., COMBUSTIBLE LIQUID, UN 1268, III
Note: In containers of 119 gallons capacity or less this product is not regulated by DOT.

SECTION 15 REGULATORY INFORMATION

TSCA:

This product is listed on the TSCA Inventory as a UVCB (Unknown, Variable Composition or Biological) Chemical at CAS Registry Number 64742-95-6

Clean Water Act/Oil Pollution Act:

This product is classified as an oil under Section 311 of the Clean Water Act (40 CFR 110) and the Oil Pollution Act of 1990. Discharge or spills which produce a visible sheen on either surface water, or in waterways/sewers which lead to surface water, must be reported to the National Response Center at 800-424-8802.

CERCLA:

This product, as sold, is derived from a fraction of crude oil and is excluded from the spill reporting requirements by CERCLA Section 101(14)(F). When this product is used in a mixture or as an ingredient in another product or in a manufacturing operation, the petroleum exclusion may terminate and an accidental spill may require reporting to the National Response Center at 800-424-8802.
This product contains approximately 3% of Xylene.
The reportable quantity of Xylene is 100 pounds.
This product contains approximately 2% of Cumene.
The reportable quantity of Cumene is 5,000 pounds.
This product contains approximately 1% of Ethylbenzene.
The reportable quantity of Ethylbenzene is 1,000 pounds.

SARA TITLE III:

Under the provisions of Title III, Sections 311/312 of the Superfund Amendments and Reauthorization Act, this product is classified into the following hazard categories: Delayed Health, Fire.
This information may be subject to the provisions of the Community Right-to-Know Reporting Requirements (40 CFR 370) if threshold quantity criteria are met.

Continues on page 6

Arvin-Franklin Compliance Monitoring Plan

Emission Unit Description	Facility Information		Compliance Monitoring		Performance Testing	Preventative Maintenance Summary	
	Allowable Emissions	Actual Emissions	Current Permit Requirements	Title V Monitoring		Activity	Frequency
Paint Booth PM Limits							
Cadillac Line Paint Booth 1 w/ Dry Filter	8.05 lbs/hr based on a PWR of 2.74 tons/hr	NA	None	None[1] (See Proposed Permit Condition A)	None [2]	• Check Ductwork • Replace Filters	Quarterly As Needed
Mazda Line Paint Booth w/ Dry Filter	3.64 lbs/hr based on a PWR of 0.84 tons/hr	NA	overspray is not: 1) visibly detectable at exhaust 2) accumulated on the roof tops or ground 3) causing any nuisance	None[1] (See Proposed Permit Condition A)	None [2]	• Check Ductwork • Replace Filters	Quarterly As Needed

* Based on IDEM May 15, 1996 Guidance
1 Allowable emissions < 10 lb/hr
2 Actual Emissions < 100 ton/yr
3 Actual Emissions < 25 tons/year

Emission Unit Description	Facility Information		Compliance Monitoring		Performance Testing	Preventative Maintenance Summary	
	Allowable Emissions	Actual Emissions	Current Permit Requirements	Title V Monitoring		Activity	Frequency
Paint Booth VOC Limits							
Mazda Line Paint Booth 1	3.5 lbs/gal.	3.8 tons/year	None	None[3] Permit Condition B)	None [2]	NA	NA
Cadillac Line Paint Booth	3.5 lbs/gal.		None		None [2]	NA	NA

* Based on IDEM May 15, 1996 Guidance

1 Allowable emissions < 10 lb/hr

2 Actual Emissions < 100 ton/yr

3 Actual Emissions < 25 tons/year

Proposed Permit Conditions

A. These conditions would apply to the following equipment with allowable emissions <10 lb/hr PM.

- Mazda Paint Booth 1
- Cadillac Paint Booth

- Particulate emissions will be observed by a trained observer once per week. No observations will be taken when the control device is vented into the building. If visible emissions are noted above "normal" conditions, then appropriate corrective action will be taken. "Normal" conditions will be emission unit specific, based on facility experience.

- Records will be maintained noting date and time of observation, results of the observation, abnormal conditions noted, type of corrective action taken (if applicable), and date and time of corrective action.

- Check filter installation once per shift. If necessary, take corrective action to ensure filters are in place.

B. Surface coating materials used in the three production paint booths shall not exceed 3.5 lbs VOC per gallon of coating delivered to the coating applicator. Records of certified environmental data sheets for each surface coating used at the facility shall be maintained for at least the past 24 month period.

7-28-97 RJ
Comment
T081-7483-00020
ILC

ARVIN
NORTH AMERICAN AUTOMOTIVE

July 24, 1997

RECEIVED

JUL 25 1997

State of Indiana
Dept. of Environmental Mgmt.
Office of Air Management

Ms. Dana L. Brown
Indiana Department of Environmental Management
Office of Air Management
100 North Senate Avenue
P.O. Box 6015
Indianapolis, IN 46206-6015

Dear Ms. Brown:

Following are Arvin NAA's comments regarding the draft Part 70 permit issued for the Arvin NAA Franklin facility, No: T081-7483-00020.

Condition D.1.8 requires the maintenance of daily records of coating usage and the calculation of a daily weighted average to demonstrate compliance with the 3.5 lb./gallon limit in 326 IAC 8-2-9. Arvin expects to comply with the 3.5 lb./gal. limit for each of the coatings, and therefore the maintenance of daily records and calculation of a daily average is unnecessary. Arvin will maintain records of the VOC content of each of the coatings used at the facility. Arvin also requests that the requirement to maintain daily cleanup solvent usage records in D.1.8 (a)(4) be eliminated since it is not related to any applicable requirement.

Condition D.2.3. This condition requires a preventative maintenance plan for the boilers, but since there is no control device, this condition should be removed.

Condition D.2.6, and D.2.7(b) should be removed. There is no control device, and therefore this form of compliance monitoring, and record keeping is inappropriate. These are relatively small boilers and AP-42 emission factors would indicate that compliance with the particulate emissions standard should easily be achieved when burning either natural gas or fuel oil.

If there are questions or comments, please direct them to Ms. Debra Chelf of my staff at 812-379-3545. Thank you.

Sincerely,

Liston Hinson
Division Environmental Manager
Arvin NAA

cc: Robert Elliott

ARVIN EXHAUST
ORIGINAL EQUIPMENT MANUFACTURERS

9/11/98 CR/CM
comments
T005-7481-00058
T005-7443-00008
T081-7483-00020

September 2, 1998

RECEIVED

SEP 10 1998

State of Indiana
Dept. of Environmental Management
Office of Air Management

Ms. Catherine Moore
Air Permits Branch
Office of Air Management
Indiana Department of Environmental Management
100 North Senate Avenue
P.O. Box 6015
Indianapolis, Indiana 46206-6015

Re: Comments on IDEM's Proposed Part 70 Permits for
Arvin North American Automotive
Gladstone, 17th Street and Franklin Facilities
Part 70 Nos.: T005-7481-00058, T005-7443-00008, and T081-7483-00020

Dear Ms. Moore:

Arvin appreciates the opportunity to provide comments on the final drafts of the Part 70 Permits and Technical Support Documents for our three automotive parts manufacturing plants including our Gladstone and 17th Street plants in Columbus, Indiana and our Franklin, Indiana plant. We have reviewed the documents prepared by your office and would offer the following comments.

Comments Specific to the Draft Permit for the Gladstone Plant (T005-7481-00058)

1. **Condition D.1.10, VOC Recordkeeping Requirements:** This condition requires the maintenance of daily records of coating usage and the calculation of a daily weighted average to demonstrate compliance with the 3.5 lb/gallon limit in 326 IAC 8-2-9. Arvin expects to comply with the 3.5 lb/gal limit for each of the coatings, and therefore the maintenance of daily records and calculation of a daily average is unnecessary. We will maintain records of the VOC content of each of the coatings used at the plant. The condition included with our Franklin, Indiana plant which has a similar process was amended to only require daily weighted VOC records to be maintained for if any coatings were applied that did not meet the 3.5 lb/gal limit. We believe that this would be an appropriate condition for the Gladstone plant as well.

We also would request that the requirement to maintain daily cleanup solvent usage records in D.1.10 (a)(4) be eliminated, since it is not related to any applicable requirement.

Comments Specific to the Draft Permit for the 17th Street Plant (T005-7443-00008)

2. **Section D.2 Boiler Operating Conditions.** This section has been added for the 750 H.P. and 350 H.P. Boilers. These boilers should be identified as insignificant activities, since the rated capacities are 1.9 and 0.9 MMBtu/hr respectively. This is based on the conversion factor of 2544 BTU/hr per Horsepower. As such, the boilers would not be subject to 40 CFR 60 Subpart Dc, or 326 IAC 7, and therefore sections D.2.2, D.2.4, D.2.5, D.2.7, and D.2.8 should be eliminated from the permit. The allowable PM limits in D.2.1 should be recalculated based on the lower heat input rates. We request that Condition D.2.3, Preventive Maintenance Plan be eliminated, since the boilers do not have control devices and they are insignificant activities. We would request that Condition D.2.6, Visible emissions notations be eliminated, since these units are insignificant activities, and they do not have control devices.

3. **Condition D.1.6, Monitoring.** We are concerned that the specific requirement to make daily observations of overspray would require that someone climb onto the roof daily to make such an observation. We believe that this is an unnecessary safety hazard and again would request that this condition be eliminated. We do not believe that the emission level associated with this operation warrants the safety hazards associated with the daily observations.

Comments Specific to the Draft Permit for the Franklin Plant (T081-7483-00020)

4. **Conditions D.1.7 and D.1.10, VOC Compliance and Recordkeeping Requirements:** These conditions require the maintenance of daily records of VOC usage, which is not required to demonstrate compliance with the limits in D.1.1. Specifically, Condition D.1.7 indicates that compliance will be determined for each day based on the total VOC usage for the previous 365-day period. Since there is no annual VOC limit this condition is not appropriate. Similarly Condition D.1.10 (a)(4), (5) & (6) require the maintenance of total daily VOC usage, even though there are no associated VOC limits which would require this information to verify compliance. These conditions should be deleted from the permit.

5. **Condition D.1.9, Monitoring.** We are concerned that the specific requirement to make daily observations of overspray would require that someone climb onto the roof daily to make such an observation. We believe that this is an unnecessary safety hazard and again would request that this condition be eliminated. We do not believe that the emission level associated with this operation warrants the safety hazards associated with the daily observations.

Comments on Permit Conditions in Draft Permits for All Three Plants

6. **Condition B.10, Certification:** The condition as written appears overly broad. We would recommend that the following phrase be added to the beginning of the condition. *"Where specifically designated by this permit or required by an applicable requirement, application forms, reports,..."*.

7. **Condition B.14, Permit Shield:** Since the wording of paragraph (b) of this condition is somewhat ambiguous with respect to whether former Construction Permit conditions, which are not included in this permit, may still be applicable, we would request that the condition be specifically amended to identify the fact that all of the conditions in the previously issued construction and operating permits are superceded by this permit.

8. **Condition B.27, Credible Evidence:** This condition should be eliminated from the permit since it is beyond the State's authority to include this provision, and it was not included in the publicly noticed draft permit.

9. **Condition C.1 (b), PSD Minor Source Status:** We would request that paragraph (b) of this condition be eliminated. This provision does not adequately or correctly reflect the requirements of the PSD regulations. When a PSD permit will be required is covered adequately in the statutes and regulations, and therefore no further statement is necessary.

10. **Condition C.14 Emergency Reduction Plans.** Attached are Emergency Reduction Plans for each of the three plants. Please amend condition C.14 accordingly.

11. **Source Operation Condition C.16, Compliance Monitoring Plan - Failure to Take Response Steps.** We do not believe that 40 CFR Part 70, or 326 IAC 2-7 provides any authority to require the preparation of a Compliance Response Plan (CRP) or to establish the basis for a violation of the permit for failure to conduct the identified response steps. Failure to take specific response steps should not be interpreted in any way as evidence of non-compliance with an underlying applicable requirement, which is implied by this permit condition. We would request that all references to a Compliance Response Plan be eliminated from this condition.

We appreciate the opportunity to provide these comments, and would be happy to clarify any of our comments, or answer any further questions. Please contact me at (812-379-3646) or Tom Rarick of KERAMIDA Environmental, Inc. at (317) 685-6615. KERAMIDA has assisted us in the preparation of these comments.

Sincerely,

Liston Hinson
Division Environmental Manager

cc: Tom Rarick, KEI

RECEIVED

SEP 10 1998

State of Indiana
Dept. of Environmental Management
Office of Air Management

EMERGENCY REDUCTION PLAN
for
Arvin North American Automotive
601 South Gladstone
Columbus, Indiana 47201

The Indiana Administrative Code (IAC) requires facilities with potential emissions over 100 tons/year to submit an Emergency Reduction Plan (ERP) to the Indiana Department of Environmental Management (IDEM) for approval (326 IAC 1-5). The purpose of the ERP is to identify measures which the facility would implement in the event that air quality levels would exceed defined "alert" or "warning levels" for Ozone, Total Suspended Particulate (herein referred to as Particulate Matter or PM), Particulate Matter with a mean aerometric diameter of 10 microns or less (PM-10), Carbon Monoxide (CO), Sulfur Dioxide (SO_2), and Nitrogen Dioxide (NO_2).

The alert and warning levels are considerably higher than the ambient air quality standards for these pollutants. The following table identifies the alert and warning levels along with the associated ambient air quality standard. This facility is located in Bartholomew County which is an area designated as attainment or unclassifiable for all of these ambient air quality standards, and historic ambient monitoring data indicate that the alert and warning levels have never been approached.

Pollutant	Ambient Standard	Alert Level	Warning Level	Attainment Status
Ozone	0.12 ppm (1 hr. max)	0.20 ppm (1 hr. max)	0.40 ppm (1 hr. max)	Attainment/ Unclassifiable
PM (TSP)	260 ug/M^3 (24 hr. avg)	375 ug/m^3 (24 hr. avg)	625 ug/m^3 (24 hr. avg)	Attainment/ Unclassifiable
PM-10	150 ug/M^3 (24 hr. avg)	350 ug/m^3 (24 hr. avg)	420 ug/m^3 (24 hr. avg)	Attainment/ Unclassifiable
CO	9 ppm (8 hr. avg)	15 ppm (8 hr. avg)	30 ppm (8 hr. avg)	Attainment/ Unclassifiable
SO_2	365 ug/M^3 (24 hr. avg)	800 ug/m^3 (24 hr. avg)	1600 ug/m^3 (24 hr. avg)	Attainment/ Unclassifiable
NO_2	0.05 ppm (annual avg.)	0.6 ppm (1 hr. max)	1.2 ppm (1 hr. max)	Attainment/ Unclassifiable

Due to the fact that exceedances of the alert and warning levels are very unlikely, We has not developed specific plans to reduce emissions. We will seek to curtail production in the event the alert or warning levels are exceeded and would develop more detailed plans if the area were to be designated as non-attainment. We believe that this general commitment should satisfy the requirements of 326 IAC 1-5 and is also consistent with the Federal requirements of 40 CFR 51.152 which grants the EPA Administrator the authority to limit the applicability of these requirements to facilities in nonattainment areas.

Liston Hinson
Division Environmental Manager

9/9/98
Date

RECEIVED

SEP 10 1998

State of Indiana
Dept. of Environmental Management
Office of Air Management

RECEIVED

SEP 10 1998

State of Indiana
Dept. of Environmental Management
Office of Air Management

EMERGENCY REDUCTION PLAN
for
Arvin North American Automotive
1001 Hurricane Street
Franklin, Indiana

The Indiana Administrative Code (IAC) requires facilities with potential emissions over 100 tons/year to submit an Emergency Reduction Plan (ERP) to the Indiana Department of Environmental Management (IDEM) for approval (326 IAC 1-5). The purpose of the ERP is to identify measures which the facility would implement in the event that air quality levels would exceed defined "alert" or "warning levels" for Ozone, Total Suspended Particulate (herein referred to as Particulate Matter or PM), Particulate Matter with a mean aerometric diameter of 10 microns or less (PM-10), Carbon Monoxide (CO), Sulfur Dioxide (SO_2), and Nitrogen Dioxide (NO_2).

The alert and warning levels are considerably higher than the ambient air quality standards for these pollutants. The following table identifies the alert and warning levels along with the associated ambient air quality standard. This facility is located in Bartholomew County which is an area designated as attainment or unclassifiable for all of these ambient air quality standards, and historic ambient monitoring data indicate that the alert and warning levels have never been approached.

Pollutant	Ambient Standard	Alert Level	Warning Level	Attainment Status
Ozone	0.12 ppm (1 hr. max)	0.20 ppm (1 hr. max)	0.40 ppm (1 hr. max)	Attainment/ Unclassifiable
PM (TSP)	260 ug/M^3 (24 hr. avg)	375 ug/m^3 (24 hr. avg)	625 ug/m^3 (24 hr. avg)	Attainment/ Unclassifiable
PM-10	150 ug/M^3 (24 hr. avg)	350 ug/m^3 (24 hr. avg)	420 ug/m^3 (24 hr. avg)	Attainment/ Unclassifiable
CO	9 ppm (8 hr. avg)	15 ppm (8 hr. avg)	30 ppm (8 hr. avg)	Attainment/ Unclassifiable
SO_2	365 ug/M^3 (24 hr. avg)	800 ug/m^3 (24 hr. avg)	1600 ug/m^3 (24 hr. avg)	Attainment/ Unclassifiable
NO_2	0.05 ppm (annual avg.)	0.6 ppm (1 hr. max)	1.2 ppm (1 hr. max)	Attainment/ Unclassifiable

Due to the fact that exceedances of the alert and warning levels are very unlikely, We has not developed specific plans to reduce emissions. We will seek to curtail production in the event the alert or warning levels are exceeded and would develop more detailed plans if the area were to be designated as non-attainment. We believe that this general commitment should satisfy the requirements of 326 IAC 1-5 and is also consistent with the Federal requirements of 40 CFR 51.152 which grants the EPA Administrator the authority to limit the applicability of these requirements to facilities in nonattainment areas.

Liston Hinson
Division Environmental Manager

9/4/98
Date

RECEIVED

SEP 10 1998

State of Indiana
Dept. of Environmental Management
Office of Air Management

RECEIVED

SEP 10 1998

State of Indiana
Dept. of Environmental Management
Office of Air Management

EMERGENCY REDUCTION PLAN
for
Arvin North American Automotive
2020 15th Street
Columbus, Indiana

The Indiana Administrative Code (IAC) requires facilities with potential emissions over 100 tons/year to submit an Emergency Reduction Plan (ERP) to the Indiana Department of Environmental Management (IDEM) for approval (326 IAC 1-5). The purpose of the ERP is to identify measures which the facility would implement in the event that air quality levels would exceed defined "alert" or "warning levels" for Ozone, Total Suspended Particulate (herein referred to as Particulate Matter or PM), Particulate Matter with a mean aerometric diameter of 10 microns or less (PM-10), Carbon Monoxide (CO), Sulfur Dioxide (SO_2), and Nitrogen Dioxide (NO_2).

The alert and warning levels are considerably higher than the ambient air quality standards for these pollutants. The following table identifies the alert and warning levels along with the associated ambient air quality standard. This facility is located in Bartholomew County which is an area designated as attainment or unclassifiable for all of these ambient air quality standards, and historic ambient monitoring data indicate that the alert and warning levels have never been approached.

Pollutant	Ambient Standard	Alert Level	Warning Level	Attainment Status
Ozone	0.12 ppm (1 hr. max)	0.20 ppm (1 hr. max)	0.40 ppm (1 hr. max)	Attainment/ Unclassifiable
PM (TSP)	260 ug/M^3 (24 hr. avg)	375 ug/m^3 (24 hr. avg)	625 ug/m^3 (24 hr. avg)	Attainment/ Unclassifiable
PM-10	150 ug/M^3 (24 hr. avg)	350 ug/m^3 (24 hr. avg)	420 ug/m^3 (24 hr. avg)	Attainment/ Unclassifiable
CO	9 ppm (8 hr. avg)	15 ppm (8 hr. avg)	30 ppm (8 hr. avg)	Attainment/ Unclassifiable
SO_2	365 ug/M^3 (24 hr. avg)	800 ug/m^3 (24 hr. avg)	1600 ug/m^3 (24 hr. avg)	Attainment/ Unclassifiable
NO_2	0.05 ppm (annual avg.)	0.6 ppm (1 hr. max)	1.2 ppm (1 hr. max)	Attainment/ Unclassifiable

Due to the fact that exceedances of the alert and warning levels are very unlikely, We has not developed specific plans to reduce emissions. We will seek to curtail production in the event the alert or warning levels are exceeded and would develop more detailed plans if the area were to be designated as non-attainment. We believe that this general commitment should satisfy the requirements of 326 IAC 1-5 and is also consistent with the Federal requirements of 40 CFR 51.152 which grants the EPA Administrator the authority to limit the applicability of these requirements to facilities in nonattainment areas.

Liston Hinson
Division Environmental Manager

9/4/98
Date

RECEIVED

SEP 10 1998

State of Indiana
Dept. of Environmental Management
Office of Air Management

INDIANA DEPARTMENT OF ENVIRONMENTAL MANAGEMENT

We make Indiana a cleaner, healthier place to live

Frank O'Bannon
Governor

John M. Hamilton
Commissioner

100 North Senate Avenue
P.O. Box 6015
Indianapolis, Indiana 46206-6015
Telephone 317-232-8603
Environmental Helpline 1-800-451-6027

NOTICE OF 30-DAY PERIOD FOR PUBLIC COMMENT

Proposed Approval of a Part 70 Permit

for Arvin North American Automotive
in Johnson County
Part 70 No.: T081-7483-00020

Notice is hereby given that the above company located at 1001 Hurricane Street, Franklin, Indiana, 46131, has made application to the Indiana Department of Environmental Management (IDEM), Office of Air Management (OAM) for a Part 70 Permit for the operation of an automotive component manufacturing plant.

Notice is hereby given that there will be a period of thirty (30) days from the date of publication of this notice during which any interested person may comment on why this proposed permit should or should not be issued. Appropriate comments should be related to any air quality issues, interpretation of the state and federal rules, calculations made, technical issues, or the effect that the operation of this source would have on any aggrieved individuals.

A copy of the application and proposed permit is available for examination at the Johnson County Public Library, 401 South State Street, Franklin, Indiana, 46131-2545. All statements, along with supporting documentation, should be submitted in writing to the IDEM, OAM, 100 North Senate Avenue, P.O. Box 6015, Indianapolis, Indiana 46206-6015. If adverse comments concerning the **air pollution impact** of this proposed source are received, together with a request for a public hearing, such a hearing may be held to give further consideration to this application.

Persons not wishing to comment at this time, but wishing to receive notice of future proceedings conducted related to this action, must submit a written request to the OAM, at the above address. All interested parties of record will receive a notice of the decision on this matter and will then have fifteen (15) days after receipt of the Notice of Decision to file a petition for administrative review. Procedures for filing such a petition will be enclosed with the Notice.

Questions should be directed to Ms. Dana L. Brown, OAM, 100 North Senate Avenue, P.O. Box 6015, Indianapolis, Indiana, 46206-6015, or at 317-233-2638 or 1-800-451-6027 (ext 3-2638).

for PD

Paul Dubenetzky, Chief
Permits Branch
Office of Air Management

DLB

INDIANA DEPARTMENT OF ENVIRONMENTAL MANAGEMENT

We make Indiana a cleaner, healthier place to live

Frank O'Bannon
Governor

John M. Hamilton
Commissioner

100 North Senate Avenue
P.O. Box 6015
Indianapolis, Indiana 46206-6015
Telephone 317-232-8603
Environmental Helpline 1-800-451-6027

June 24, 1997

VIA FEDERAL EXPRESS

Liston Hinson
Arvin North American Automotive
1001 Hurricane Street
Franklin, IN 46131

Re: Public Notice
Company: **Arvin North American Automotive**
Part 70 Operating Permit#: **T081-7483-00020**

Dear Mr. Hinson:

Enclosed is a copy of your Draft Part 70 Operating Permit Operating Permit, Technical Support Document, calculations, and the Public Notice which will be printed in your local newspaper.

You will not be responsible for collecting any comments, nor are you responsible for having the notice published in the newspaper. The Office of Air Management (OAM) has requested that the Franklin Daily Journal in Franklin publish this notice no later than Friday, June 27, 1997.

Please review the enclosed documents carefully because they may contain estimates which have been applied to your source. Especially note the list of facilities and the substantiative facility requirements, particularly compliance monitoring, which is in Part C.6 of your Draft Part 70 Operating Permit. This is your opportunity to comment on the draft Part 70 Operating Permit and notify the OAM of any corrections that are needed before the Part 70 Operating Permit is issued. Questions or comments about the enclosed documents should be directed to Dana L. Brown, Indiana Department of Environmental Management, Office of Air Management, 100 N. Senate Avenue, Indianapolis, Indiana, 46206-6015 or at 317-233-2638 or 1-800-451-6027.

Sincerely,

Janet Mobley

Janet Mobley
Permits Branch
Office of Air Management

Enclosures

Title V
9/30/96

CHECK LIST FOR THE
ADMINISTRATIVE ADJUDICATION ACT (AAA)

Company ALVIN NORTH AMERICAN AUTOMOTIVE ID # T 081-7483-00020

County JOHNSON City FRANKLIN

Draft Public Notice

✓ Permanent County & Company AAA List checked
~~✓ No list JM /Date 5/28/97~~
✓ List attached JR 6/3/97

1265 Exemption Qualification, Interim, and Final Permit

✓ Permanent County & Company AAA List checked
✓ No list JM /Date 3/6/99
✓ List attached

Relocations, Name Change & Transfers, and FESOP, SSOA and NSR Amendments

_____ Permanent County & Company AAA List checked
_____ No list_____/Date_____
_____ List attached

SSOA

_____ Permanent County & Company AAA List checked
_____ No list_____/Date_____
_____ List attached

The following are concerned citizens. All correspondence needs to be sent **Via Federal Express/Certified Mail**.

_____

_____

_____

_____

_____

_____

_____

company Arvin North American Automotive

county Johnson

cp# T081-7483 issued 6-24-97

61-50

CHAIN OF CUSTODY SERVICE BY FIRST CLASS MAIL

DOCUMENT: Public Notice

INSERTED BY: Goldie Roberts

STORES & MAIL STAFF MEMBER RESPONSIBLE FOR PICKING UP LETTERS: _____

CENTRAL MAIL COURIER RESPONSIBLE FOR PICKING UP LETTERS FROM IDEM: DS

DATE DOCUMENT MAILED: 6-24-97

TIME DOCUMENT PICKED UP FROM IDEM: _____

NAMES AND ADDRESSES OF PERSONS BEING SENT DOCUMENT ATTACHED.

SEND COPY OF PUBLIC NOTICE AND FINAL FOR FIRST FEW TITLE V'S

61-50 000 0000-00000

MIKE SMITH*
ELI LILLY & CO
LILLY CORPORATE CENTER
INDIANAPOLIS IN 46285 6/3/97

61-50 000 0000-00000

MIRIAM SMULEVITZ DANT*
BAKER & DANIELS
300 NORTH MERIDIAN ST SUITE 2700
INDIANAPOLIS IN 46204 6/3/97

SEND COPY OF PUBLIC NOTICE AND FINAL FOR FIRST FEW TITLE V'S

61-50 000 0000-00000

MIKE SMITH*
ELI LILLY & CO
LILLY CORPORATE CENTER
INDIANAPOLIS IN 46285 6/3/97

61-50 000 0000-00000

MIRIAM SMULEVITZ DANT*
BAKER & DANIELS
300 NORTH MERIDIAN ST SUITE 2700
INDIANAPOLIS IN 46204 6/3/97

*SEND INFO VIA FEDERAL EXPRESS

INDIANA DEPARTMENT OF ENVIRONMENTAL MANAGEMENT

We make Indiana a cleaner, healthier place to live

Frank O'Bannon
Governor

John M. Hamilton
Commissioner

100 North Senate Avenue
P.O. Box 6015
Indianapolis, Indiana 46206-6015
Telephone 317-232-8603
Environmental Helpline 1-800-451-6027

June 24, 1997

ATTENTION: PUBLIC NOTICES, LEGAL ADVERTISING

Franklin Daily Journal
P.O. Box 699
Franklin, IN 46131

Enclosed, please find one Indiana Department of Environmental Management Notice of Public Comment for Arvin North American Automotive in Johnson County, Indiana .

Since our agency must comply with requirements which call for a 30-Day Public Notice Period, we request that you print this notice one time, no later than Friday, June 27, 1997.

Please send me a notarized form and clippings showing the date of publication. Also, please send the billing to my attention, at the Indiana Department of Environmental Management, 100 North Senate Avenue, P.O. Box 6015, Indianapolis, Indiana, 46206-6015.

We are required by the Auditor's Office to request that you place the Federal ID Number on all claims. If you require additional information please call (317) 232-8369.

Sincerely,

Janet Mobley

Janet Mobley
Permit Branch
Office of Air Management

cc: Accounting
Part 70 Operating Permit # T081-7483-00020
enclosure

U YOUR COPY PAID 07/10/97

030

Indiana Dept. Environmental Mgt.
(Governmental Unit)
Johnson County, Indiana

TO: Daily Journal
2575 N. Morton Street
Franklin, IN 46131

RECEIVED
D.E.M.
JUL 01 1997
CONTROLLERS DIV.

PUBLISHER'S CLAIM

LINE COUNT
Display matter (must not exceed two actual lines, neither of which shall total more than four solid lines of type in which the body of the advertisement is set

	Number of equivalent line	
HEAD -	Number of lines	
BODY -	Number of lines	
TAIL -	Number of lines	
TOTAL	Number of lines	60

COMPUTATION OF CHARGES

60 lines, 1 columns wide, 60 equivalent lines @ .270 cents / line ..... $ 16.20

Additional charge for notices containing rule or tabular work ..... $
(50% of above amount)

Charge for extra proofs of publication ..... $
($1.00 for each proof in excess of two)

TOTAL AMOUNT OF CLAIM ..... $ 16.20

Data for computing costs:
Width of single column -- 8.5 ems
Number of insertions -- 1
Size of type -- 5.5 point

Pursuant to the provisions and penalties of Chapter 155, Acts 1953, I hereby certify that the foregoing account is just and correct, that the amount claimed is legally due, after allowing all just credits, and that no part of the same has been paid.

Patricia A. Phillips

Date: June 27, 1997

Legal Advertising Clerk
Title

LEGAL ADVERTISEMENT
NOTICE OF 30-DAY PERIOD
FOR PUBLIC COMMENT
Proposed Approval of a Part 70 Permit for Arvin North American Automotive in Johnson County
Part 70 No.: T081-7483-00020

Notice is hereby given that the above company located at 1001 Hurricane Street, Franklin, Indiana, 46131, has made application to the Indiana Department of Environmental Management (IDEM), Office of Air Management (OAM) for a Part 70 Permit for the operation of an automotive component manufacturing plant.

Notice is hereby given that there will be a period of thirty (30) days from the date of publication on this notice during which any interested person may comment on why this proposed permit should or should not be issued. Appropriate comments should be related to any air quality issues, interpretation of the state and federal rules, calculations made, technical issues, or the effect that the operation of this source would have on any aggrieved individuals.

A copy of the application and proposed permit is available for examination at the Johnson County Public Library, 401 South State Street, Franklin, Indiana, 46131-2546. All statements, along with supporting documentation, should be submitted in writing to the IDEM, OAM, 100 North Senate Avenue, P. O. Box 6015, Indianapolis, Indiana 46206-6015. If adverse comments concerning the air pollution impact of this proposed source are received, together with a request for a public hearing, such a hearing may be held to give further consideration to this application.

Persons not wishing to comment at this time, but wishing to receive notice of future proceedings conducted related to this action, must submit a written request to the OAM, at the above address. All interested parties of record will receive a notice of the decision on this matter and will then have fifteen (15) days after receipt of the Notice of Decision to file a petition for administrative review. Procedures for filing such a petition will be enclosed with the Notice.

Questions should be directed to Ms. Dana L. Brown, OAM, 100 North Senate Avenue, P.O. Box 6015, Indianapolis, Indiana, 46206-6015, or at 317-233-2636 or 1-800-451-6027 (ext. 3-2636).

Paul Dubenetzky, Chief
Permits Branch
Office of Air Management

(J) 6-27-97

PUBLISHER'S AFFIDAVIT

State of Indiana)
Johnson County) ss:

Personally appeared before me, a notary public in and for said county and state, the undersigned Patricia A. Phillips who, being duly sworn, says that she is Legal Advertising Clerk of the Daily Journal newspaper of general circulation printed and published in the English language in the (city/town) of Franklin in state and county aforesaid, and that the printed matter attached hereto is a true copy, which dates of publication being as follows:

June 27, 1997

Patricia A. Phillips

Subscribed and sworn to before me this 27th day of June 1997.

Donna L. Rund

Donna L. Rund, Notary
Commission expires: January 2, 1999

INDIANA DEPARTMENT OF ENVIRONMENTAL MANAGEMENT

We make Indiana a cleaner, healthier place to live

Frank O'Bannon
Governor

Michael O'Connor
Commissioner

100 North Senate Avenue
P.O. Box 6015
Indianapolis, Indiana 46206-6015
Telephone 317-232-8603
Environmental Helpline 1-800-451-6027

Mr. Liston Hinson
Arvin North American Automotive
P.O. Box 3000
Columbus, Indiana 47202

May 9, 1997

Re: **Notification of Assigned Reviewer**
T-005-7481-00058, T-081-7483-00020,
and T-005-7443-00008

Dear Mr. Hinson:

Your Title V applications for automotive component manufacturing plants, T-005-7481-00058 located at 601 South Gladstone, Columbus, Indiana 47201, was received on December 11, 1996, for T-081-7483-00020, located at 1001 Hurricane Street, Franklin, Indiana 46131, was received on December 11, 1996, and for T-005-7443-00008, located at 2020 15th Street, Columbus, Indiana 47201, was received on December 10, 1996. The Office of Air Management (OAM) intends to take final action on your Title V applications, on or before December 31, 1997. As the initial step of the review process, a Notice of Administrative Completeness (NOAC) letter was sent to your sources on February 5, 1997.

I have been assigned to continue the permit review process. As the permit reviewer, I will be working closely with you, and the OAM Compliance Branch Staff. If the information contained in your application has changed, or additional operations or processes have been added at your source or if you have any questions regarding the status of your application, please contact me at 317-233-2638 or at 1-800-451-6027 extension 3-2638.

Please specify the Title V identification numbers: T-005-7481-00058, T-081-7483-00020, and T-005-7443-00008, on any of your inquiries or correspondence. If additional questions arise as the review proceeds, I will be contacting you.

Sincerely,

Dana L. Brown

Dana L. Brown, Environmental Manager
Permit Review Section 1
Office of Air Management

DLB

cc: File - Bartholomew County
File - Johnson County
Air Compliance Section I - D. J. Knotts
Permit Tracking - Janet Mobley

Folded

INDIANA DEPARTMENT OF ENVIRONMENTAL MANAGEMENT

We make Indiana a cleaner, healthier place to live

Evan Bayh
Governor
Michael O'Connor
Commissioner

100 North Senate Avenue
P.O. Box 6015
Indianapolis, Indiana 46206-6015
Telephone 317-232-8603
Environmental Helpline 1-800-451-6027

VIA CERTIFIED MAIL P451-341-844

February 5, 1997

Mr. Liston Hinson
Arvin Industries, Inc.
P.O. Box 3000
Columbus, IN 47202

Re: Part 70 Operating Permit Application
Part 70 No.: T081-7483-00020
Notice of Administrative Completeness

Dear Mr. Hinson:

On December 11, 1996, the Office of Air Management (OAM) received your Part 70 permit application for the automotive component manufacturing plant, located at 1001 Hurricane Street in Franklin, IN.

At this time your application has been determined to be administratively complete under the requirements for operation in 326 IAC 2-7-3. This letter fulfils OAM's requirements under 2-7-8(c), which requires notice to the applicant of whether the application is complete.

This application has been determined to be complete under 326 IAC 2-7-3; however, additional information needs may be discovered during the technical review of the application. The OAM will inform you of any need for additional information required to complete this review and to issue a permit under the state and federal requirements of 326 IAC 2-7.

If you have any questions regarding this administrative completeness review of the Part 70 permit application, please call Vaughn Ison at 317-233-0432 or 1-800-451-6027 (ext 3-0432). Please specify **Part 70 No. T081-7483-00020** for future inquiries or correspondence.

Sincerely,

Paul Dubenetzky

Paul Dubenetzky, Chief
Permits Branch
Office of Air Management

VEI
cc: File - Johnson County
D. J. Knotts