Indiana Department of Environmental Management

Confined Feeding Operation (CFO)

CFO Permit Application

Fair 6986
Operating
Draft
Whitley Co.

And

Supporting Documentation

For:

Adlock Broilers, LLC
P.O. Box 987
Columbia City, IN 46725
(Mailing Address)

ORIGINAL

Location:
5300 N 250 W
Columbia City, IN 46725
Whitley County
USGS Quad: Lorane NE
T32N R9E Section 7

RECEIVED
JUL 28 2017
DEPARTMENT OF
ENVIRONMENTAL MANAGEMENT
OFFICE OF LAND QUALITY

Prepared By:

Agronomic Solutions, LLC
Melissa Lehman
7070 S 500 W
Topeka, IN 46571
(260) 593-2092

Adlock Broilers, LLC
P.O. Box 987
Columbia City, IN 46725
Whitley County

RECEIVED
JUL 28 2017
DEPARTMENT OF
ENVIRONMENTAL MANAGEMENT
OFFICE OF LAND QUALITY

Introduction

Adlock Broilers, LLC are seeding a permit to be able to raise broilers for Miller Poultry in Whitley County. They would like to build 4- 40,000 head poultry barns (P1-P4) and a covered manure stack (P5). They are planning to build the barns this upcoming fall. We are requesting the permit for these barns with this application. This application meets all required setbacks.

The Miller Poultry 60'x600' barns will be built as designed on pages 45-46. It will have a compacted clay liner for a floor. Clay will be used from the clay loam soils found at the site. This will be made by packing two separate lifts of clay 6". So the finished clay liner will be 12" in depth. The methods to compact the clay will follow the Design Standards for Solid Manure Storages – Statewide Requirements, so that it will be compacted to at least 90% of the maximum density. An existing driveway will go back to the barns where the trucks will be able to turn around and back up to the P1 – P5 barns. The producer is planning on building P1 & P2 this fall and later building the P3 & P4 barns.

The P5 Manure stack will be built in two stages. The first stage (40'x82', south half) to be built when the P1 & P2 barns are constructed. The second stage (40'x82', north half) to be built when the P3 & P4 barns are constructed.

The only animals that Adlock Broilers, LLC will ever have on this parcel will be the broilers we have listed in this application for this operation. Adlock Broilers, LLC do not own or operate any adjacent or contiguous AFO operations as required by 327 IAC 19-7-1 (11).

A complete soils investigation was done by Eickholtz Inc. The reports show that the existing soils have a seasonal water table of 10"-17" for all barns. Their report is included in the application on pages 58-60. All the structures are going to be constructed at grade or higher therefore are not affected by the seasonal water table.

Based on a review of information provided through the Indiana Department of Natural Resources and the Indiana Geological Survey, the proposed building sites are not located in a floodplain, karst area, wetland area, area prone to sinkholes or in close proximity to mines. An aerial map of the proposed construction site is included with the site plan information on page 37 That document this determination.

Manure and wastewater from this confined animal feeding operation will be 100% distributed to a local farmer and be used as a nutrient source on their fields. The producer has a signed agreement with Cormany Farms, Inc. to distribute all manure and is included with our application on page 65.

ORIGINAL

BUSINESS INFORMATION
CONNIE LAWSON
INDIANA SECRETARY OF STATE
07/10/2017 02:25 PM

Business Details

Business Name:	**ADLOCK BROILERS, LLC**	Business ID:	**201705031193956**
Entity Type:	**Domestic Limited Liability Company**	Business Status:	**Active**
Creation Date:	**05/03/2017**	Inactive Date:	
Principal Office Address:	**P.O. 987, Columbia City, IN, 46725, USA**	Expiration Date:	**Perpetual**
Domicile State:	**Indiana**	Business Entity Report Due Date:	**05/31/2019**
		Years Due:	

Registered Agent Information

Type: **Individual**

Name: **Joe Lopez**

Address: **5300 N. 250 West, Columbia City, IN, 46725, USA**

RECEIVED
JUL 28 2017
DEPARTMENT OF
ENVIRONMENTAL MANAGEMENT
OFFICE OF LAND QUALITY

ORIGINAL

Adlock Broilers LLC
P.O. Box 987
Columbia City, IN 46725
July 22, 2017

Confined Feeding Program
Office of Land Quality
Indiana Department of Environmental Management
100 North Senate Avenue
Indianapolis, IN 46204

To Whom It May Concern:

I own land to the north of Adlock Broilers LLC in Thorncreek Township section 7. I am aware of the proposed livestock production facility being built by Adlock Broilers LLC just to the south of my property.

I am signing this letter to give my permission to waive the 100 ft property line setback and the 300 ft offsite well setback for the Chicken barns.

Thank you,

Joe & Sarah Lopez

RECEIVED
JUL 28 2017
DEPARTMENT OF
ENVIRONMENTAL MANAGEMENT
OFFICE OF LAND QUALITY

ORIGINAL

CFO / CAFO APPLICATION PACKET

CFO / CAFO New Construction Permit Application Checklist

Part of State Form 55051 (R2 / 6-15)
Approved by State Board of Accounts, 2015
Confined Feeding Operation (CFO)
National Pollutant Discharge Elimination System Concentrated Animal Feeding Operation (NPDES CAFO)

INDIANA DEPARTMENT OF ENVIRONMENTAL MANAGEMENT
Confined Feeding Section
Office of Land Quality
100 North Senate Avenue
MC 65-45, IGCN 1101
Indianapolis, Indiana 46204
(800) 451-6027 extension 2-4473

INSTRUCTIONS: *1. The application **must** contain the following information.*
2. Indicate whether each item is provided. Mark the item "N/A" if the item is not applicable to your application. Applications deemed significantly incomplete will be returned to the applicant.

REQUIRED INFORMATION	PROVIDED? (Y, N or N/A)
General	
I. Three (3) signed copies of the application packet provided by Indiana Department of Environmental Management (IDEM). One (1) of the copies may be electronic.	Y
II. Application Fee *(A copy of the check and the Fee Transmittal Form must be attached.)*	
A. CFO $100 B. NPDES Individual without construction $300 C. NPDES Individual with construction $400	Y
III. Disclosure Statement	Y
IV. Notification Requirement	Y
A. County Executive / County Commissioner List	Y
B. One-Half Mile List	Y
C. Adjoining Land Owner List	Y
D. Potentially Affected Parties List	Y
1. Copy of the mailing to the adjoining land owners and potentially affected parties	Y
E. Copy of Notification Affidavit	Y
Plot Maps *(must be legible)*	
I. USDA NRCS Soil Survey Map	Y
A. Location of the waste management system	Y
B. Property boundaries of the confined feeding operation	Y
C. Boundaries of all manure application areas	Y
D. Boundaries of livestock and poultry production areas	Y
E. Available acreage for manure application after calculation setbacks	Y
II. USGS Topographical Map	Y
A. Location of public water supply wells within 1,000 feet of the manure storage structure	Y
B. Location of public water supply surface intake structures within 1,000 feet of the manure storage structure	Y
C. Location of the waste management system	Y
D. Property boundaries of the confined feeding operation	Y
E. Boundaries of all manure application areas	N/A
F. Boundaries of livestock and poultry production areas	Y
G. Available acreage for manure application after calculation setbacks	N/A
Farmstead Plan *(Must be drawn to approximate scale or show specific distances between waste management system and features listed below that are within 500 feet. Plan must be submitted on paper no less than 8 ½ x 11 inches in size. Plan must also contain reference to true north.)*	
I. Location of existing and proposed waste management systems	Y
II. Location of any of the following within 500 feet of a waste management system (on-site or off-site)	
A. Residences	Y
B. Surface waters of the state	Y
C. Public and private roads	Y

RECEIVED
JUL 28 2017
DEPARTMENT OF ENVIRONMENTAL MANAGEMENT
OFFICE OF LAND QUALITY

ORIGINAL

REQUIRED INFORMATION Page 2	PROVIDED? (Y, N or N/A)
D. Water well locations	Y
E. Characteristics of karst terrain as identified in 327 IAC 19-2-24	N/A
F. Drainage patterns	Y
G. Property boundary line	Y
H. All outlets of known tile drains or any other type of subsurface or surface drainage outlet	Y
I. Drainage inlets, including water and sediment control basins showing their outlets, and ponds with outlets	Y
J. Mortality management sites	Y
III. Show the diversion of uncontaminated surface water	Y
IV. Show the type and number of animals per structure	Y
V. Indicate any part of the CFO that is within 100 year flood plain	N/A
Unapproved Waste Management System Drawings	
I. Detailed views	Y
II. Necessary cross sections to define all dimensions	Y
III. Construction materials	Y
IV. Elevations of the entire waste management system *(applicable only if relying on gravity flow)*	N/A
Soil and Water Table Information	
I. Test Holes	Y
A. Must be conducted by certified soil scientist, professional geologist or professional engineer registered in Indiana	Y
B. Number of test holes must be sufficient to adequately characterize the seasonal water table and soil.	Y
1. Concrete storage structures	
a. Test hole must be two (2) feet below base of structure	Y
2. Earthen storage structures	
a. Test hole must be five (5) feet below base of structure for non-karst area	Y
b. Test hole must be to shallower of either bedrock or ten (10) feet below base of structure in karst area	Y
Manure Management Plan	
I. Procedures for soil testing	Y
A. Soil test must provide sufficient information about soil fertility to allow for nutrient recommendations (may not represent more than twenty (20) acres per sample)	Y
B. Frequency of soil test must be specified in the plan and at a minimum be conducted once every four (4) years	Y
II. Procedures for manure testing	Y
A. Manure test must provide sufficient information about manure content to allow for nutrient recommendations	Y
B. Frequency of manure test must be specified in the plan and at a minimum be conducted once every year	Y
C. One (1) manure test must be conducted for each type of manure generated	Y
III. Legible maps of manure application areas	N/A
IV. Land use agreements signed by the property owners on whose property the manure will be applied	N/A
V. If Applicable	
A. Alternate method proposed by applicant for managing of the manure	N/A
B. Other practices to be used that assure the CFO meet the performance standards of 327 IAC 19-3-1	N/A
C. Land application acreage requirements waiver, as described in 327 IAC 19-14-2(d)	Y
Nutrient Management Plan *(required for NPDES CAFO Individual permit applicants)*	
Any NPDES CAFO Individual Permit applicant must submit a nutrient management plan (NMP) with their application materials. The NMP should contain best management practices necessary to meet the requirements listed below, and any applicable effluent limitations and standards, including those specified in 40 CFR part 412. The NMP must, to the extent applicable:	
A. Ensure adequate storage of manure, litter, and process wastewater, including procedures to ensure proper operation and maintenance of the storage facilities	N/A

RECEIVED
JUL 28 2017
DEPARTMENT OF
ENVIRONMENTAL MANAGEMENT
OFFICE OF LAND QUALITY

ORIGINAL

REQUIRED INFORMATION Page 3	PROVIDED? (Y, N or N/A)
B. Ensure proper management of mortalities so that they are not disposed of in a liquid manure, storm water, or process wastewater storage or treatment system that is not specifically designed to treat animal mortalities	N/A
C. Ensure that clean water is diverted, as appropriate, from the production area	N/A
D. Prevent direct contact of confined animals with waters of the United States	N/A
E. Ensure that chemicals and other contaminants handled on-site are not disposed of in any manure, litter, process wastewater, or storm water storage or treatment system unless specifically designed to treat such chemicals and other contaminants	N/A
F. Identify appropriate site specific conservation practices to be implemented, including buffers or equivalent practices, to control runoff of pollutants to waters of the United States	N/A
G. Identify protocols for appropriate testing of manure, litter, process wastewater, and soil	N/A
H. Establish protocols to land apply manure, litter or process wastewater in accordance with site specific nutrient management practices that ensure appropriate agricultural utilization of the nutrients in the manure, litter or process wastewater	N/A
I. Identify specific records that will be maintained to document the implementation and management of the minimum elements above	N/A
Alternate Design or Compliance Approach; Innovative Technology *(if applicable)*	
I. Documentation that indicates that the performance standards in 327 IAC 19-3-1 will be met should include:	
A. Design specification that indicate adequate structural integrity	N/A
B. Protective measures that reduce the potential for spills	N/A
C. Existence of barriers or surface gradient that directs liquid way form features specified for protection	N/A
D. Operational practices that provide additional protection	N/A
E. Threats of adverse impacts to water quality or other specified sensitive areas	N/A
F. Other criteria related to protection of the environment or human health	N/A
Additional Attachments *(if applicable)*	
I. Copies of any written waivers related to reduction of setback distances	Y
II. Copies of all land use agreements as described in 327 IAC 19-14-2(b)	N/A

RECEIVED
JUL 28 2017
DEPARTMENT OF
ENVIRONMENTAL MANAGEMENT
OFFICE OF LAND QUALITY

ORIGINAL

IDEM

Indiana Department of Environmental Management

CFO PERMIT APPLICATION

For:

Adlock Broilers, LLC
P.O. Box 987
Columbia City, IN 46725
Whitley County
(Mailing Address)

RECEIVED
JUL 28 2017
DEPARTMENT OF
ENVIRONMENTAL MANAGEMENT
OFFICE OF LAND QUALITY

Prepared By:

Agronomic Solutions, LLC
Melissa Lehman
7070 S 500 W
Topeka, IN 46571
(260) 593-2092

ORIGINAL

CFO / CAFO APPLICATION PACKET
Fee Transmittal

Part of State Form 55051 (R2 / 6-15)
Approved by State Board of Accounts, 2015
Confined Feeding Operation (CFO)
National Pollutant Discharge Elimination System Concentrated Animal Feeding Operation (NPDES CAFO)

INDIANA DEPARTMENT OF ENVIRONMENTAL MANAGEMENT
Confined Feeding Section
Office of Land Quality
100 North Senate Avenue
MC 65-45, IGCN 1101
Indianapolis, Indiana 46204
(800) 451-6027 extension 2-4473

INSTRUCTIONS: *This form must be used to transmit fees for all NPDES CAFO and CFO applications as required in IC 13-18-10-2(a)(5), IC 13-18-20-12, IC 13-18-20-11.5, 327 IAC 15-16-5(a)(2) and (3), 327 IAC 15-16-5(b)(1)(B), and 327 IAC 19-7-1(c)(9). This form is required and supersedes all previous versions. IDEM will not accept substitutes, altered or previously supplied forms. The application fee for each application type is listed in the table below. Locate the type of application to be submitted and the appropriate application fee amount. Make a check or money order for the appropriate application fee amount listed below payable to the Indiana Department of Environmental Management. For payment by Master Card or Visa please contact the office by telephone at 317-234-3099 Monday through Friday between the hours of 9:00am to 3:00pm.* ***Return only the Fee Transmittal Form and fee to:***

Indiana Department of Environmental Management
PO Box 3295
Indianapolis, IN 46206-3295

NOTE: ***A copy of the check or credit card receipt and a copy of this completed Fee Transmittal Form must be attached to all other submitted application materials. Submit these copies and all application information to:***

Indiana Department of Environmental Management
Confined Feeding Permits Section
Office of Land Quality
100 North Senate Avenue
IGCN 1101
Indianapolis, Indiana 46204

RECEIVED
JUL 28 2017
DEPARTMENT OF ENVIRONMENTAL MANAGEMENT
OFFICE OF LAND QUALITY

I. APPLICANT INFORMATION

Name:	Adlock Broilers, LLC	Farm ID Number:	
Mailing Address:	P.O. Box 987		
City:	Columbia City		
State:	IN	ZIP Code:	46725
Telephone:	(260) 610-4630		
Operation County:	Whitley		

II. APPLICATION TYPE AND FEE AMOUNT

		Application Type	Fee Amount
CFO Approval – Construction and/or Operation (Including Renewals)			
☒	A.	Completely New Operation (Currently Undeveloped Site)	$100.00
☐	B.	Existing Operation without Existing CFO Approval	
☐	C.	Existing Operation with Expired CFO Approval	
☐	D.	Expansion of Operation with Current CFO Approval	
☐	E.	Amendment of Existing CFO Approval – Permit Condition	$0.00
☐	F.	Amendment of Existing CFO Approval – Change in the type or number of animals that increases manure production	
☐	G.	CFO Approval Renewal/Manure Management Plan	

ORIGINAL

II. APPLICATION TYPE AND FEE AMOUNT *(continued)*			
Application Type			
'DES CAFO Individual Permit – Construction and Coverage			
☐	H.	Completely New Operation (Currently Undeveloped Site)	$400.00
☐	I.	Existing Operation without Current CFO Approval or NPDES CAFO Permit	
☐	J.	Existing Operation with Current CFO Approval	
☐	K.	Current NPDES CAFO Individual Permit Holder Proposing Construction	
NPDES CAFO Individual Permit – Permit Modification			
☐	L.	Construction or Expansion of Storage or Animals – No Permit Extension	$400.00
☐	M.	No Construction or Expansion of Storage or Animals – No Permit Extension	$50.00
NPDES CAFO Individual Permit – Renewal			
☐	N.	Renewal of Coverage for Operation for Operation with Current NPDES CAFO Individual Permit	$300.00

RECEIVED
JUL 28 2017
DEPARTMENT OF
ENVIRONMENTAL MANAGEMENT
OFFICE OF LAND QUALITY

ORIGINAL

CFO / CAFO APPLICATION PACKET
General Information

Part of State Form 55051 (R2 / 6-15)
Approved by State Board of Accounts, 2015
Confined Feeding Operation (CFO)
National Pollutant Discharge Elimination System Concentrated Animal Feeding Operation (NPDES CAFO)

RECEIVED
JUL 28 2017
DEPARTMENT OF ENVIRONMENTAL MANAGEMENT
CFO/CAFO AND QUALITY

INDIANA DEPARTMENT OF ENVIRONMENTAL MANAGEMENT
Confined Feeding Section
Office of Land Quality
100 North Senate Avenue
MC 65-45, IGCN 1101
Indianapolis, Indiana 46204
(800) 451-6027 extension 2-4473

INSTRUCTIONS:

1. *Complete all general application information solicited below.*
2. *Provide the required signature(s) as directed.*
3. *Select the application type.*

This form is required and supersedes all previous versions. IDEM will not accept substitutes, altered or previously supplied forms.

I. GENERAL APPLICATION INFORMATION

A. OPERATION INFORMATION

Operation Name:	Adlock Broilers, LLC	Farm ID Number:	6986
Operation Address:	5300 N 250 W		
Operation City:	Columbia City	Operation ZIP Code:	46725
Operation Telephone:	(260) 610-4630		
Operation County:	Whitley		
Nearest Crossroads to Operation:	250 W & Etna Rd		

B. APPLICANT *(Person or entity the CFO Approval is issued to)*

.e Applicant is the Owner/Operator that applies for or has received a CFO Approval under 327 IAC 19, including renewals and amendments. An Applicant may be an individual, a partnership, a copartnership, a firm, a company or any other entity listed under IC 13-11-2-158(b). There may be more than one entity that constitutes an Owner/Operator. Each entity that meets the definition of Owner/Operator for the CFO must submit the requested information below.

Name:*	Adlock Broilers, LLC		
Mailing Address:	P.O. Box 987		
City:	Columbia City		
State:	IN	ZIP Code:	46725
Telephone *(Home)*:			
Telephone *(Business)*:			
Telephone *(Cell)*:	(260) 610-4630		
Facsimile:		E-mail Address:	adlock.farms@yahoo.com

***A limited liability company (LLC) or corporation (Inc. or Corp.) must be registered with the Indiana Secretary of State.**

ORIGINAL

C. PROPERTY OWNER *(At the Time of Application Submittal)*

☒ Same as Applicant Listed Above

RECEIVED
JUL 28 2017
DEPARTMENT OF ENVIRONMENTAL MANAGEMENT
OFFICE OF LAND QUALITY

Name:			
Mailing Address:			
City:			
State:		ZIP Code:	
Telephone *(Home)*:			
Telephone *(Business)*:			
Telephone *(Cell)*:			
Facsimile:		E-mail Address:	

D. OPERATION MANAGER, OPERATOR, AND/OR LESSEE
(If Different than Applicant or manager and/or authorized agent for Entity)

☐ Same as Applicant Listed Above OR Person listed below is: ☐ Manager ☒ Operator ☐ Lessee

Name:	Joe Lopez		
Mailing Address:	P.O. Box 987		
City:	Columbia City		
State:	IN	ZIP Code:	46725
Telephone *(Home)*:			
Telephone *(Business)*:			
Telephone *(Cell)*:	(260) 610-4630		
Facsimile:		E-mail Address:	adlock.farms@yahoo.com

E. CURRENT OPERATION PERMIT INFORMATION

Current Permit/Approval Type *(check one)*:

☐ CFO Approval

☐ NPDES CAFO Individual Permit

☒ None - New Facility

☐ None - Expired Approval or Expired Permit

ORIGIN

6986
Farm ID (Log ID) Number (Current or expired)

Current/Last Approval (Animal Waste) Number

F. ADJACENT OR CONTIGUOUS ANIMAL FEEDING OPERATIONS (AFOs)

Are there any AFOs adjacent to or contiguous with the CFO that are under common ownership or trol of the applicant? ☐ Yes ☒ No

If yes, provide a statement identifying the AFOs and describing the common ownership. The response to this item will determine whether the AFOs will have to be incorporated into the CFO approval. Attach additional sheets as necessary.

II. SIGNATURES

I have reviewed all components and information contained within the accompanying forms and application materials. To the best of my knowledge and belief, such information is true, complete, and accurate. I am aware of the penalties for submitting false information under IC 13-30-10.1 and IC 35-44-2-1.

The agency decision based on the accompanying forms and application materials will be issued in the name of the person or entity listed as the applicant(s).

THIS SECTION MUST BE SIGNED.

I warrant that I have the authority to sign this Application on my own behalf, and on behalf of any entity for which I am signing in a representative capacity.

Adlock Broilers, LLC-Joe Lopez- Owner/Operator

Title and Name of Operation Owner or Authorized Agent* – ***Type or Print***

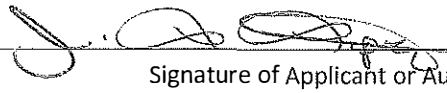

Signature of Applicant or Authorized Agent

7-27-17

Date Signed *(month, day, year)*

Signature of Property Owner If Different than Operation Owner **

Date Signed *(month, day, year)*

* A signature by an Authorized Agent will require Power of Attorney (POA) if not a member of the entity.
** A signed letter from the property owner acknowledging the submittal of an application on their property may substitute for signature.

III. APPLICATION TYPE

Using the Application Type and Requirements Worksheet, in the list below, select the application type which you are submitting. Please note that an Amendment of Existing CFO Approval and CFO Approval Renewal are the only situations where more than one box may be selected.

RECEIVED
JUL 28 2017
DEPARTMENT OF ENVIRONMENTAL MANAGEMENT OFFICE OF LAND QUALITY

CFO Approval – Construction and/or Operation (Including Renewals)		
☒	A.	Completely New Operation (Currently Undeveloped Site)
☐	B.	Existing Operation Without Existing CFO Approval
☐	C.	Existing Operation with Expired CFO Approval
☐	D.	Expansion of Operation with Current CFO Approval
☐	E.	Amendment of Existing CFO Approval – Permit Condition
☐	F.	Amendment of Existing CFO Approval – Change in the type or number of animals that increases manure production
☐	G.	CFO Approval Renewal/Manure Management Plan
NPDES CAFO Individual Permit – Construction and Permit Coverage		
☐	H.	Completely New Operation (Currently Undeveloped Site)
☐	I.	Existing Operation without Current CFO Approval or NPDES Permit
☐	J.	Existing Operation with Current CFO Approval
☐	K.	Current NPDES CAFO Individual Permit Holder Proposing Construction
NPDES CAFO Individual Permit - Permit Modification		
☐	L.	Construction or Expansion of Storage or Animals – No Permit Extension
☐	M.	No Construction or Expansion of Storage or Animals – No Permit Extension
NPDES CAFO Individual Permit - Renewal		
☐	N.	Renewal Coverage for Operation with Current NPDES CAFO Individual Permit

CFO / CAFO APPLICATION PACKET
Disclosure Statement

Part of State Form 55051 (R2 / 6-15)
Approved by State Board of Accounts, 2015
Confined Feeding Operation (CFO)
National Pollutant Discharge Elimination System Concentrated Animal Feeding Operation (NPDES CAFO)

RECEIVED
JUL 28 2017
DEPARTMENT OF ENVIRONMENTAL MANAGEMENT
OFFICE OF LAND QUALITY

INDIANA DEPARTMENT OF ENVIRONMENTAL MANAGEMENT
Confined Feeding Section
Office of Land Quality
100 North Senate Avenue
MC 65-45, IGCN 1101
Indianapolis, Indiana 46204
(800) 451-6027 extension 2-4473

INSTRUCTIONS: *Indiana's Confined Feeding Control Law requires disclosure statements regarding certain alleged material violations of environmental laws with all applications which propose construction of a confined feeding operation or expansion of a confined feeding operation that increases animal capacity or manure storage capacity, or both. (See IC 13-18-10-1.4; IC 13-18-10-2.1; IC 13-11-2-8(a); IC 13-11-2-158(b); and IC 13-11-2-191 to review the laws that apply to this form.)*

Section I of this form helps applicants identify responsible parties associated with their application.
Section II helps applicants determine whether each responsible party must submit a disclosure statement.
Section III helps each responsible party submit a complete disclosure statement.

Follow the instructions in each section of this form. IDEM will not accept substitutes, altered, or previously supplied forms.

Applicant Information:

An applicant may be an individual, a partnership, a copartnership, a firm, a company, a corporation, an association, a joint stock company, a trust, an estate, a political subdivision, a state agency, or other legal entity, or their legal representative, agent, or assigns. (See IC 13-11-2-8 and IC 13-11-2-158) The applicant(s) listed on this form must match the applicant(s) listed on the first page of the application packet.

Applicant(s):	Adlock Broilers, LLC			Farm ID Number	
Contact Person:	Adlock Broilers, LLC			*(Provide Farm ID number if expanding an existing operation.)*	
Business Address:	P.O. Box 987			Telephone:	(260) 610-4630
City:	Columbia City	State:	IN	ZIP Code:	46725

Section I. List of Responsible Parties:

List each responsible party associated with the application.

A disclosure statement is required for each Responsible Party, as defined under IC 13-11-2-191. The Responsible Parties includes each owner/operator defined under 327 IAC 19-2-32 and its respective officers, corporate directors, or senior management officials.

The applicant(s) may have multiple responsible parties. Attach additional sheets as necessary.

Responsible Party 1					
Name:	Adlock Broilers, LLC				
Business Address:	P.O. Box 987			Telephone:	(260) 610-4630
City:	Columbia City	State:	IN	ZIP Code:	46725
Relationship to Applicant:	Owner				

Responsible Party 2					
Name:	Joe Lopez				
Business Address:	P.O. Box 987			Telephone:	(260) 610-4630
City:	Columbia City	State:	IN	ZIP Code:	46725
Relationship to Applicant:	Owner/Operator				

Responsible Party 3					
Name:					
Business Address:				Telephone:	
City:		State:		ZIP Code:	
Relationship to Applicant:					

Section II. Determining responsible parties who must provide a disclosure statement:

Indiana's Confined Feeding Control Law requires a disclosure statement for alleged violations of environmental law that meet the criteria noted in IC 13-18-10-1.4(a) & (b). This section helps applicants determine whether the responsible parties have violations that meet these criteria.

You may group responsible parties who have identical responses to the questions in this section by listing multiple names or responsible party numbers in the space provided. Provide additional copies of this page as needed to complete this section for all responsible parties listed in Section I.

Responsible Party Name(s) or Number(s) from Section I *(type or print)*: Adlock Broilers, LLC

Note: This section applies to material violations alleged in any state of the United States and in any other country.

A. Answer both questions 1 and 2 below:

1. Have any state or federal officials at any time alleged that the responsible party or parties committed acts or omissions that constitute a material violation of state or federal environmental law?

☐ **Yes** ☒ **No**

2. Have foreign officials at any time alleged that the responsible party or parties committed acts or omissions that constituted a material violation of foreign environmental law, and that would have constituted a material violation of state or federal environmental law if the act or omission had occurred in the United States?

☐ **Yes** ☒ **No**

If the answer to both questions is "No," a disclosure statement is not required. Skip to item D below.

B. Indiana's Confined Feeding Control Law requires the responsible party or parties to submit the disclosure statement required by IC 13-18-10-1.4(c) only if the alleged acts or omissions acknowledged by a "Yes" answer to questions A1 or A2 above presented a substantial endangerment to human health or the environment.

If the alleged acts or omissions presented a substantial endangerment to human health or the environment, skip to Section III to prepare and submit the disclosure statement.

Otherwise, proceed to item C on this page.

RECEIVED
JUL 28 2017
DEPARTMENT OF ENVIRONMENTAL MANAGEMENT
OFFICE OF LAND QUALITY

C. If the alleged acts or omissions acknowledged by a "Yes" answer to questions A1 or A2 above ***did not*** present a substantial endangerment to human health or the environment, the responsible party or parties do not have to submit a disclosure statement in Section III. However, consistent with IDEM's authority to conduct an inquiry or investigation under IC 13-18-10-2.1(a)(2), the responsible party or parties **must** attach the following information:

1. The name and address of the government entity that alleged the acts or omissions.

2. A description of the information relied upon in determining that the alleged acts or omissions did not present a substantial endangerment to human health or the environment. Provide the name and qualifications of the person(s) who made the determination.

Proceed to item D on this page.

D. If directed here by items A or C, the responsible party or parties listed on this page are not required to complete Section III, the disclosure statement required by IC 13-18-10-1.4(c). The applicant or responsible party must attach the information required in item C if applicable, and sign and date below. Their disclosure submittal is complete.

Per IC 13-18-10-2.1(e)(1)(A), the commissioner may deny an application if a responsible party intentionally misrepresents or conceals any material fact in an application for approval under IC 13-18-10.

I affirm that all information submitted in this form and any attachments is, to the best of my knowledge and belief, true, accurate, and complete. I am aware of the penalties for submitting false information under IC 13-18-10-1.4, IC 13-30-10-1.5 and IC 35-44-2-1.

Applicant or Responsible Party Signature: _____ Date Signed: 7-27-17 *(month, day, year)*

Printed Name: Adlock Broilers, LLC

Section II. Determining responsible parties who must provide a disclosure statement:

Indiana's Confined Feeding Control Law requires a disclosure statement for alleged violations of environmental law that meet the criteria noted in IC 13-18-10-1.4(a) & (b). This section helps applicants determine whether the responsible parties have violations that meet these criteria.

You may group responsible parties who have identical responses to the questions in this section by listing multiple names or responsible party numbers in the space provided. Provide additional copies of this page as needed to complete this section for all responsible parties listed in Section I.

Responsible Party Name(s) or Number(s) from Section I *(type or print)*: Joe Lopez

Note: This section applies to material violations alleged in any state of the United States and in any other country.

A. Answer both questions 1 and 2 below:

1. Have any state or federal officials at any time alleged that the responsible party or parties committed acts or omissions that constitute a material violation of state or federal environmental law?

☐ **Yes** ☒ **No**

2. Have foreign officials at any time alleged that the responsible party or parties committed acts or omissions that constituted a material violation of foreign environmental law, and that would have constituted a material violation of state or federal environmental law if the act or omission had occurred in the United States?

☐ **Yes** ☒ **No**

If the answer to both questions is "No," a disclosure statement is not required. Skip to item D below.

B. Indiana's Confined Feeding Control Law requires the responsible party or parties to submit the disclosure statement required by IC 13-18-10-1.4(c) only if the alleged acts or omissions acknowledged by a "Yes" answer to questions A1 or A2 above presented a substantial endangerment to human health or the environment.

If the alleged acts or omissions presented a substantial endangerment to human health or the environment, skip to Section III to prepare and submit the disclosure statement.

Otherwise, proceed to item C on this page.

RECEIVED
JUL 28 2017
DEPARTMENT OF ENVIRONMENTAL MANAGEMENT
OFFICE OF LAND QUALITY

C. If the alleged acts or omissions acknowledged by a "Yes" answer to questions A1 or A2 above ***did not*** present a substantial endangerment to human health or the environment, the responsible party or parties do not have to submit a disclosure statement in Section III. However, consistent with IDEM's authority to conduct an inquiry or investigation under IC 13-18-10-2.1(a)(2), the responsible party or parties **must** attach the following information:

1. The name and address of the government entity that alleged the acts or omissions.

2. A description of the information relied upon in determining that the alleged acts or omissions did not present a substantial endangerment to human health or the environment. Provide the name and qualifications of the person(s) who made the determination.

Proceed to item D on this page.

D. If directed here by items A or C, the responsible party or parties listed on this page are not required to complete Section III, the disclosure statement required by IC 13-18-10-1.4(c). The applicant or responsible party must attach the information required in item C if applicable, and sign and date below. Their disclosure submittal is complete.

Per IC 13-18-10-2.1(e)(1)(A), the commissioner may deny an application if a responsible party intentionally misrepresents or conceals any material fact in an application for approval under IC 13-18-10.

I affirm that all information submitted in this form and any attachments is, to the best of my knowledge and belief, true, accurate, and complete. I am aware of the penalties for submitting false information under IC 13-18-10-1.4, IC 13-30-10-1.5 and IC 35-44-2-1.

Applicant or Responsible Party Signature: _____ Date Signed: 7-27-17 *(month, day, year)*

Printed Name: Joe Lopez

Section II. Determining responsible parties who must provide a disclosure statement (*Continued*):

Have any of the responsible parties from Section I owned or operated a CFO/CAFO outside of Indiana within the last five (5) years? ☐ Yes ☒ No

If Yes, Responsible Party Name(s) or Number(s) from Section I (*type or print)*

List all states and/or any other country wherein the responsible party owned or operated a CFO/CAFO. Include the operation name(s):

Section III. Disclosure Statement - Instructions:

Responsible parties directed here from Section II must complete and submit the disclosure statement on the next page to meet the requirements of Indiana's Confined Feeding Control Law. (See IC 13-18-10-1.4(c))

Attach additional copies of the disclosure statement page as necessary. Label each attachment with the name of the responsible party.

The Confined Feeding Control Law directs IDEM to consider the following factors when reviewing disclosure statements and deciding whether to approve or deny the application (See IC 13-18-10-2.1(f)):

1. The nature and details of the acts attributed to the responsible party
2. The degree of culpability of the responsible party
3. The responsible party's cooperation with the state, federal, or foreign agencies
4. The responsible party's dissociation from any other persons or entities convicted in a criminal enforcement action
5. Prior or subsequent self-policing or internal education programs established by the responsible party to prevent acts, omissions, or violations

For items D through G on the next page, the responsible party must include information in the description of the enforcement action that is relevant to these factors for IDEM to consider in reviewing the disclosure.

RECEIVED
JUL 28 2017
DEPARTMENT OF
ENVIRONMENTAL MANAGEMENT
OFFICE OF LAND QUALITY

RECEIVED
JUL 28 2017
DEPARTMENT OF
ENVIRONMENTAL MANAGEMENT
OFFICE OF LAND QUALITY

INDIANA DEPARTMENT OF
ENVIRONMENTAL MANAGEMENT
Confined Feeding Section
Office of Land Quality
100 North Senate Avenue
MC 65-45, IGCN 1101
Indianapolis, Indiana 46204
(800) 451-6027 extension 2-4473

CFO / CAFO APPLICATION PACKET
Notification Requirements

Part of State Form 55051 (R2 / 6-15)
Approved by State Board of Accounts, 2015
Confined Feeding Operation (CFO)
National Pollutant Discharge Elimination System Concentrated Animal Feeding Operation (NPDES CAFO)

INSTRUCTIONS: Indiana law requires you to notify certain people of your application in some cases. Complete Section I to determine what notice requirements apply to your application if any. Complete the applicable portions of Section II and III as instructed. This form is required and supersedes all previous versions. IDEM will not accept substitutes, altered or previously supplied forms.

I. NOTIFICATION REQUIREMENTS

A. Answer all four questions below. If an action is listed to the right of your answer, complete the section(s) listed. If none of your answers require an action, then no notice is required and the form is complete. If further action is required, read Section I.B. and Section I.C. below regarding proper notice requirements, materials, and certification.

1. Does the application propose construction of a new confined feeding operation (CFO) or an expansion through construction of an existing CFO?

☒ Yes — **Complete** **Section II.A. County Executive / County Commissioner List**; **Section II.B. One-Half (1/2) Mile List**; **Section II.C. Adjoining Land Owner List**; **Section III. Potentially Affected Parties List**

☐ No

2. Is the application for an amendment to the CFO approval? For example, does the application propose a change to a permit condition or a change in the type or number of animals that does not involve construction but that will increase manure production.

☐ Yes — **Complete** **Section II.A. County Executive / County Commissioner List**; **Section II.C. Adjoining Land Owner List**

Note: Send this information to IDEM. IDEM will use this information to notify county officials and adjoining land owners of the decision on the amendment. You do not have to notify county officials or adjoining land owners of your application, but you may choose to do so at your option.

☒ No

3. Does the operation have a current CFO approval?

☒ Yes — **Notification is not required if application is an Approval Renewal /MMP.**

☐ No — **Complete** **Section II.A. County Executive / County Commissioner List**; **Section II.B. One-Half (1/2) Mile List**; **Section II.C. Adjoining Land Owner List**; **Section III. Potentially Affected Parties List**

4. Is the application for a NPDES CAFO Individual permit coverage, construction, modification, or renewal?

☐ Yes — **Complete** **Section II.A. County Executive / County Commissioner List**; **Section II.C. Adjoining Land Owner List**; **Section III. Potentially Affected Parties List**

☒ No

B. The *Notification of Application Submittal* form provided in this packet or an equivalent letter or notice that you develop must:

1. Be provided, not more than ten (10) working days ***after*** submitting an application, to all individuals listed in Section II.A., Section II.B., and Section II.C. as directed in Section I.A. above;
2. Be sent by mail;
3. Be in writing;
4. Include the date on which the application was submitted to IDEM;
5. Include a brief description of the application, such as permit type, location, animal type(s), animal numbers, numbers and types of barns and storage structures, and methods of manure application; and
6. Be paid for by you, the applicant.

C. If notification of application submittal is required, you must certify to IDEM the notice was completed in compliance with the requirements of Section I.B. listed above. The certification must be included with your application and must contain:

1. The enclosed *Notification Affidavit* which is completed, signed, and notarized;
2. The lists generated as directed by all four answers provided in Section I.A.; and
3. A copy of the notice described Section I.B. above.

II. PARTIES NOTIFIED BY APPLICANT

A. County Executive / County Commissioner List

Required when applicable by IC 13-18-10-2(b)(1) and 327 IAC 19-8-7(a)(1)

To complete this section, list the county executive/county commissioners for the county in which the confined feeding operation is to be located or expanded. Attach additional sheets as necessary.

1.	Name	Thomas Rethlake				
	Mailing address (*number and street*)	220 W Van Buren St., Ste 102				
	City	Columbia City	State	IN	ZIP code	46725
2.	Name	Don Amber				
	Mailing address (*number and street*)	220 W Van Buren St., Ste 102				
	City	Columbia City	State	IN	ZIP code	46725
3.	Name	George Schrumpf				
	Mailing address (*number and street*)	220 W Van Buren St., Ste 102				
	City	Columbia City	State	IN	ZIP code	46725
4.	Name					
	Mailing address (*number and street*)					
	City		State		ZIP code	
5.	Name					
	Mailing address (*number and street*)					
	City		State		ZIP code	
6.	Name					
	Mailing address (*number and street*)					
	City		State		ZIP code	

RECEIVED
JUL 28 2017
DEPARTMENT OF ENVIRONMENTAL MANAGEMENT
OFFICE OF LAND QUALITY

B. One-Half (1/2) Mile List

Required when applicable by IC 13-18-10-2(b)(2) and 327 IAC 19-8-7(a)(2)

To complete this section, you must, to the best of your ability, list all known persons described below:

1. Each owner and each occupant of land of which any part of the boundary is one-half (1/2) mile or less from any part of the proposed footprint of either a livestock or poultry production structure, a permanent manure storage structure, or both, on the land on which the confined feeding operation is to be located; and
2. Each owner and each occupant of land of which any part of the boundary is one-half (1/2) mile or less from any part of the proposed footprint of either a livestock or poultry production structure, the expanded area of a livestock or poultry production structure, or both, on the land on which the confined feeding operation is to be expanded.

Attach additional sheets as necessary.

1.	Name	William & Mary Adkins				
	Mailing address (*number and street*)	5612 N 250 W				
	City	Columbia City	State	IN	ZIP code	46725
2.	Name	Gregory Fry				
	Mailing address (*number and street*)	5752 N 250 W				
	City	Columbia City	State	IN	ZIP code	46725

II. PARTIES NOTIFIED BY APPLICANT *(Continued)*

B. One-Half (1/2) Mile List *(Continued)*

3.	Name	Kathleen Fry Trustee				
	Mailing address *(number and street)*	5384 N Etna Rd				
	City	Columbia City	State	IN	ZIP code	46725
4.	Name	Jeremy & Elizabeth Baxter				
	Mailing address *(number and street)*	2181 W 600 N				
	City	Columbia City	State	IN	ZIP code	46725
5.	Name	Joseph & Dorothy Cochran				
	Mailing address *(number and street)*	2155 W 600 N				
	City	Columbia City	State	IN	ZIP code	46725
6.	Name	Bernard Dahms				
	Mailing address *(number and street)*	1639 W 600 N				
	City	Columbia City	State	IN	ZIP code	46725
7.	Name	Copp Family Farms LLC				
	Mailing address *(number and street)*	2175 W Dowell Rd				
	City	Columbia City	State	IN	ZIP code	46725
8.	Name	Tim & Jerred Reiff				
	Mailing address *(number and street)*	5666 E 300 N				
	City	Warsaw	State	IN	ZIP code	46582
9.	Name	West Point Trinity United Methodist Church Inc.				
	Mailing address *(number and street)*	4980 N Etna Rd				
	City	Columbia City	State	IN	ZIP code	46725
10.	Name	Mark & Thomas Zumbrun				
	Mailing address *(number and street)*	2460 N Etna Rd				
	City	Columbia City	State	IN	ZIP code	46725
11.	Name	Seth Slater & Rachel Lehman				
	Mailing address *(number and street)*	2470 W 500 N				
	City	Columbia City	State	IN	ZIP code	46725
12.	Name	Jay & Doris Pence				
	Mailing address *(number and street)*	2240 W 500 N				
	City	Columbia City	State	IN	ZIP code	46725
13.	Name	Steve Grim				
	Mailing address *(number and street)*	2020 W 500 N				
	City	Columbia City	State	IN	ZIP code	46725
14.	Name	Mitch Bair				
	Mailing address *(number and street)*	2061 W 500 N				
	City	Columbia City	State	IN	ZIP code	46725

RECEIVED
JUL 28 2017
DEPARTMENT OF ENVIRONMENTAL MANAGEMENT
OFFICE OF LAND QUALITY

II. PARTIES NOTIFIED BY APPLICANT (Continued)

B. One-Half (1/2) Mile List (Continued)

15.	Name	Jim & Muriel Pliett				
	Mailing Address *(number and street)*	2119 W 500 N				
	City	Columbia City	State	IN	ZIP Code	46725
16.	Name	Stephen & Kimberly Jewell				
	Mailing Address *(number and street)*	2191 W 500 N				
	City	Columbia City	State	IN	ZIP Code	46725
17.	Name	John & Nancy Austin				
	Mailing Address *(number and street)*	4847 N Etna Rd				
	City	Columbia City	State	IN	ZIP Code	46725
18.	Name	Joseph & Julie Reynolds				
	Mailing Address *(number and street)*	4758 N Etna Rd				
	City	Columbia City	State	IN	ZIP Code	46725
19.	Name	Trevor & Nicole Moser				
	Mailing Address *(number and street)*	6908 N 200 W				
	City	Columbia City	State	IN	ZIP Code	46725
20.	Name	Scott Woodrell				
	Mailing Address *(number and street)*	4792 N 250 W				
	City	Columbia City	State	IN	ZIP Code	46725
21.	Name	Steven & Nancy Pulver				
	Mailing Address *(number and street)*	4814 N 250 W				
	City	Columbia City	State	IN	ZIP Code	46725
22.	Name	Robert & Stephanie Craven				
	Mailing Address *(number and street)*	2303 W 500 N				
	City	Columbia City	State	IN	ZIP Code	46725
23.	Name	Michael & Cynthia Huffman				
	Mailing Address *(number and street)*	2367 W 500 N				
	City	Columbia City	State	IN	ZIP Code	46725
24.	Name	Jeffrey & Penny Braun				
	Mailing Address *(number and street)*	2415 W 500 N				
	City	Columbia City	State	IN	ZIP Code	46725
25.	Name	Douglas & Gina Dickmeyer				
	Mailing Address *(number and street)*	2451 W 500 N				
	City	Columbia City	State	IN	ZIP Code	46725
26.	Name	James & Anna Johnson				
	Mailing Address *(number and street)*	4799 N 250 W				
	City	Columbia City	State	IN	ZIP Code	46725

RECEIVED
JUL 28 2017
DEPARTMENT OF
ENVIRONMENTAL MANAGEMENT
OFFICE OF LAND QUALITY

II. PARTIES NOTIFIED BY APPLICANT (Continued)

B. One-Half (1/2) Mile List (Continued)

27.	Name	Lucy Geerer				
	Mailing Address *(number and street)*	3522 Barbour Place Circle				
	City	Lousiville	State	KY	ZIP Code	40241
28.	Name	Hammer Family Limited Partnership				
	Mailing Address *(number and street)*	3522 Barbour Place Circle				
	City	Lousiville	State	KY	ZIP Code	40241
29.	Name	John Western				
	Mailing Address *(number and street)*	3625 N 250 W				
	City	Columbia City	State	IN	ZIP Code	46725
30.	Name	Leroy & Nancy Waugh				
	Mailing Address *(number and street)*	5424 N Etna Rd				
	City	Columbia City	State	IN	ZIP Code	46725
31.	Name	Robert Hively				
	Mailing Address *(number and street)*	2211 Garden Rd				
	City	Aurora	State	IL	ZIP Code	60506
32.	Name	Jack & Josephine Hively				
	Mailing Address *(number and street)*	7150 N 350 W				
	City	Columbia City	State	IN	ZIP Code	46725
33.	Name	Cormany Farms Inc.				
	Mailing Address *(number and street)*	4030 W Lincolnway				
	City	Columbia City	State	IN	ZIP Code	46725
34.	Name					
	Mailing Address *(number and street)*					
	City		State		ZIP Code	
35.	Name					
	Mailing Address *(number and street)*					
	City		State		ZIP Code	
36.	Name					
	Mailing Address *(number and street)*					
	City		State		ZIP Code	
37.	Name					
	Mailing Address *(number and street)*					
	City		State		ZIP Code	
38.	Name					
	Mailing Address *(number and street)*					
	City		State		ZIP Code	

RECEIVED
JUL 28 2017
DEPARTMENT OF
ENVIRONMENTAL MANAGEMENT
OFFICE OF LAND QUALITY

II. PARTIES NOTIFIED BY APPLICANT *(Continued)*

C. Adjoining Land Owner List

Required when applicable by 327 IAC 15-16-5(a)(4) and 327 IAC 19-7-1(c)(8)

This section may solicit individuals listed in Section II.B. above. It is not necessary to list previously listed individuals more than once. This section is for adjoining property owners to the operation that are outside of the one-half (1/2) mile distance listed above and who were not listed in Section B. To complete this section, you must, to the best of your ability, list all known persons described below if not already provided in Section B above:

1. Each person who owns land that adjoins the land on which the confined feeding operation is to be located; or
2. If a person who owns land that adjoins the land on which the confined feeding operation is to be located does not occupy the land, all occupants of the land.

Attach additional sheets as necessary.

☐ All adjoining land owners and occupants are included in the One-Half (1/2) Mile List. Therefore, this list is blank.

1.	Name	Adam & Leslie Perry				
	Mailing address (*number and street*)	1749 W 600 N				
	City	Columbia City	State	IN	ZIP code	46725
2.	Name					
	Mailing address (*number and street*)					
	City		State		ZIP code	
3.	Name					
	Mailing address (*number and street*)					
	City		State		ZIP code	
4.	Name					
	Mailing address (*number and street*)					
	City		State		ZIP code	
5.	Name					
	Mailing address (*number and street*)					
	City		State		ZIP code	
6.	Name					
	Mailing address (*number and street*)					
	City		State		ZIP code	
7.	Name					
	Mailing address (*number and street*)					
	City		State		ZIP code	
8.	Name					
	Mailing address (*number and street*)					
	City		State		ZIP code	
9.	Name					
	Mailing address (*number and street*)					
	City		State		ZIP code	
10.	Name					
	Mailing address (*number and street*)					
	City		State		ZIP code	

RECEIVED
JUL 28 2017
DEPARTMENT OF ENVIRONMENTAL MANAGEMENT
OFFICE OF LAND QUALITY

III. POTENTIALLY AFFECTED PARTIES

Required when applicable by 327 IAC 5-3-12, and 327 IAC 19-7-1(c)(8)

This section is for additional potentially affected parties you, the applicant, identify which are not required to be listed in Section II. It is not necessary to list individuals already included in Section II. Attach additional sheets as necessary.

☒ Potentially affected parties are included in the lists in Section II. Therefore, this list is blank.

1.	Name					
	Mailing address (*number and street*)					
	City		State		ZIP code	
2.	Name					
	Mailing address (*number and street*)					
	City		State		ZIP code	
3.	Name					
	Mailing address (*number and street*)					
	City		State		ZIP code	
4.	Name					
	Mailing address (*number and street*)					
	City		State		ZIP code	
5.	Name					
	Mailing address (*number and street*)					
	City		State		ZIP code	
6.	Name					
	Mailing address (*number and street*)					
	City		State		ZIP code	
7.	Name					
	Mailing address (*number and street*)					
	City		State		ZIP code	
8.	Name					
	Mailing address (*number and street*)					
	City		State		ZIP code	
9.	Name					
	Mailing address (*number and street*)					
	City		State		ZIP code	
10.	Name					
	Mailing address (*number and street*)					
	City		State		ZIP code	

RECEIVED
JUL 28 2017
DEPARTMENT OF
ENVIRONMENTAL MANAGEMENT
OFFICE OF LAND QUALITY

CFO / CAFO APPLICATION PACKET
Notification of Application Submittal
Part of State Form 55051 (R2 / 6-15)
Approved by State Board of Accounts, 2015
Confined Feeding Operation (CFO)
National Pollutant Discharge Elimination System Concentrated Animal Feeding Operation (NPDES CAFO)

INDIANA DEPARTMENT OF ENVIRONMENTAL MANAGEMENT
Confined Feeding Section
Office of Land Quality
100 North Senate Avenue
MC 65-45, IGCN 1101
Indianapolis, Indiana 46204
(800) 451-6027 extension 2-4473

An application has been submitted to the Indiana Department of Environmental Management (IDEM) for the Confined Feeding Operation (CFO) or Concentrated Animal Feeding Operation (CAFO) that is described below. Indiana law requires an applicant for a CFO or CAFO approval to notify certain people of an application. See IC 13-18-10-2(b) and 327 IAC 19-7-1. This notice has been sent to you by the applicant to satisfy the notice requirement. Please review the information below to learn how to get more information or submit comments about this application. IDEM will notify you of the final decision on the application.

Applicant / Operation name: Adlock Broilers, LLC

Date application submitted *(required)*: 7/27/2017
(month, day, year)

RECEIVED
JUL 28 2017
DEPARTMENT OF ENVIRONMENTAL MANAGEMENT
OFFICE OF LAND QUALITY

Operation permit type *(applicable regulations)*

- [x] CFO Approval *(IC 13-18-10 and 327 IAC 19)*
- [ ] NPDES CAFO Individual Permit *(IC 13-18-10 and 327 IAC 15-16)*

Operation Location

- Nearest crossroads / address: 4800 N 250 W
- Nearest city / town: Columbia City
- County: Whitley
- Political township: Thorncreek
- USGS section/Township/Range: Section 7/T32N/R9E

Brief description of application
(should include animal type(s), animal numbers, numbers and types of barns and storage structures, and methods of manure application)

The producer would like to build 4 Miller Poultry broiler barns at this site over time. Each barn will be 60'x600' in size and house 40,000 birds. We are seeking a CFO permit for 160,000 birds in 4 barns and a litter stack building. The producer will distribute the dry litter to local farmers to be land applied and used as fertilizer on crop fields, following all of the IDEM and OISC guidelines and rules.

Questions regarding the location or other aspects of the application should be addressed to

- Applicant's name: Adlock Broilers, LLC
- Address *(number and street)*: P.O. Box 987
- City / State / ZIP code: Columbia City, IN 46725
- Telephone number: (260) 610-4630

If the application meets the requirements in IC 13-18-10, 327 IAC 15-16, and 327 IAC 19, IDEM will approve the application. You may view these laws and regulations on the iga.IN.gov website.

IDEM will accept written public comments for at least thirty-three (33) days following the date the applicant mailed this notice. You can send comments on the application to the address listed at the top of this sheet. You can contact IDEM's Confined Feeding Program staff at (800) 451-6027, extension 2-4473, or (317) 232-4473.

CFO / CAFO APPLICATION PACKET
Notification Affidavit
Part of State Form 55051 (R2 / 6-15)
Approved by State Board of Accounts, 2015
Confined Feeding Operation (CFO)
National Pollutant Discharge Elimination System Concentrated Animal Feeding Operation (NPDES CAFO)

RECEIVED
JUL 28 2017
DEPARTMENT OF ENVIRONMENTAL MANAGEMENT
OFFICE OF LAND QUALITY

INDIANA DEPARTMENT OF ENVIRONMENTAL MANAGEMENT
Confined Feeding Section
Office of Land Quality
100 North Senate Avenue
MC 65-45, IGCN 1101
Indianapolis, Indiana 46204
(800) 451-6027 extension 2-4473

INSTRUCTIONS: If a notice is required as directed in Section I.A. on the Notification Requirements form, the applicant must submit an affidavit to IDEM that certifies the notice requirements listed in Section I.B. on the Notification Requirements form were completed. The certification to IDEM must contain this completed Notification Affidavit. This affidavit is required and supersedes all previous versions. IDEM will not accept substitutes, altered, or previously supplied affidavits.

Joe Lopez, being first duly sworn under oath, deposes and says:

1. I live in Whitley County, Indiana, and being of sound mind and over twenty-one (21) years of age I am competent to give this affidavit.
2. I hold the position of Owner/Operator *(Title of Affiant)* for Adlock Broilers, LLC *(Name of Applicant or Operation)*.
3. I warrant that I have the authority to sign this affidavit on my own behalf, and on behalf of any entity for which I am signing in a representative capacity.
4. As required by IC 13-18-10-2(b), or 327 IAC 19-7-1 when applicable, the applicant will mail written notice to all required persons detailed on the Notification Requirements form not more than ten (10) days after submission of the accompanying application on behalf of Adlock Broilers, LLC *(Name of Applicant or Operation)*.
5. The written notice mailed to all required persons will include a brief description of the application, such as permit type, location, animal type(s), animal numbers, numbers and types of barns and storage structures, and methods of manure application.

Further Affiant Saith Not.

I affirm under the penalty for perjury that the representations contained in this affidavit are true, to the best of my information and belief.

Applicant signature J. Lopez

Date signed (*mm, dd, yy*) 7-27-17

State of Indiana County of Whitley

Before me, the undersigned, a Notary Public in and for said County and State, personally appeared Joe Lopez known by me to be the person who executed the foregoing instrument, signed the same and acknowledged to me that he/she did so sign the same, and that his/her free act and deed and that the statements made in the foregoing instrument are true.

IN WITNESS WHEROF, I have set my hand and official seal this 27th day of July, 20 17

Signature Brandi N. Drake

Printed Brandi N. Drake

BRANDI N DRAKE
Notary Public
SEAL
State of Indiana
My Commission Expires June 26, 2025

My commission expires (*month, day, year*) June 26, 2025

Residence of LaGrange County, Indiana.

CFO / CAFO APPLICATION PACKET
Notification Format for Agency Correspondence

Part of State Form 55051 (R2 / 6-15)
Approved by State Board of Accounts, 2015
Confined Feeding Operation (CFO)
National Pollutant Discharge Elimination System Concentrated Animal Feeding Operation (NPDES CAFO)

INDIANA DEPARTMENT OF ENVIRONMENTAL MANAGEMENT
Confined Feeding Section
Office of Land Quality
100 North Senate Avenue
MC 65-45, IGCN 1101
Indianapolis, Indiana 46204
(800) 451-6027 extension 2-4473

INSTRUCTIONS: The Indiana Department of Environmental Management (IDEM) normally notifies applicants of final decisions by mail. In 2012, Indiana Law changed to allow IDEM to use electronic mail instead of US Postal Service mail. This form allows you to specify whether you want to receive correspondence and notices related to your CFO or CAFO application by mail, by e-mail or both. It also allows you to specify if you want correspondence directed to a consultant by e-mail. Please complete the information below to indicate your preference.

I. GENERAL INFORMATION

Operation Name: Adlock Broilers, LLC Farm ID Number: _____

Applicant Name *(printed)*: Adlock Broilers, LLC

Applicant Consent for Notification Only for This Permit Application *(initials and date)*: JH 7-27-17

Applicant Consent for Notification on All Future Applications/Correspondence *(initials and date)*: _____

II. NOTIFICATION FORMAT

Applicant should understand that, as a result of consenting to electronic notification, e-mail address(es) listed below will be part of the agency's public record.

Please indicate your preference for the method of receiving these notifications by initialing and dating the appropriate lines below and then return the completed form to our office with your application.

RECEIVED
JUL 28 2017
DEPARTMENT OF ENVIRONMENTAL MANAGEMENT
OFFICE OF LAND QUALITY

Initials	Date (month, day, year)	
JH	7-27-17	Please continue sending via US Postal Service mail.
		AND/OR
JH	7-27-17	Please send correspondence to the e-mail address as indicated below: *I understand that my e-mail address will be part of the public record.* E-mail address: adlock.farms@yahoo.com
JH	7-27-17	Please send copies of correspondence for this application to the following consultant e-mail address(es): *I understand that this e-mail address will be part of the public record.* Consultant e-mail address(es): melissa@agronomicsolutionsllc.com
JH	7-27-17	I authorize the consultant(s) listed above to submit Construction Notifications on my behalf.

Indiana Department of Environmental Management

PLOT MAPS

For:

Adlock Broilers, LLC
P.O. Box 987
Columbia City, IN 46725
Whitley County
(Mailing Address)

RECEIVED
JUL 28 2017
DEPARTMENT OF
ENVIRONMENTAL MANAGEMENT
OFFICE OF LAND QUALITY

Prepared By:

Agronomic Solutions, LLC
Melissa Lehman
7070 S 500 W
Topeka, IN 46571
(260) 593-2092

CFO / CAFO APPLICATION PACKET
Plot Maps

Part of State Form 55051 (R2 / 6-15)
Approved by State Board of Accounts, 2015
Confined Feeding Operation (CFO)
National Pollutant Discharge Elimination System Concentrated Animal Feeding Operation (NPDES CAFO)

RECEIVED
JUL 28 2017
DEPARTMENT OF
ENVIRONMENTAL MANAGEMENT
OFFICE OF LAND QUALITY

INDIANA DEPARTMENT OF
ENVIRONMENTAL MANAGEMENT
Confined Feeding Section
Office of Land Quality
100 North Senate Avenue
MC 65-45, IGCN 1101
Indianapolis, Indiana 46204
(800) 451-6027 extension 2-4473

INSTRUCTIONS: *Plot maps must be submitted with applications as directed in the "Application Types and Requirements Worksheet." The specific plot maps which must be submitted for each application type are detailed in Section I. and Section V. The submitted plots must conform with the application requirements noted in Section II., Section III., and Section IV. This form is required and supersedes all previous versions. IDEM will not accept substitutes, altered, or previously supplied forms.*

I. PLOT MAPS

Listed below are plot maps required to be submitted with CFO and CAFO applications. Please note each plot map type is labeled (A, B, and C). Based on the application type previously determined in the "Application Type and Requirements Worksheet" and noted on the "General Information" form, locate the application type in Section V. below. The columns to the right of each listed application type note the required plot maps, as labeled here. As directed in Section I. above, based on the application type determined in the "Application Type and Requirements Worksheet" and noted on the "General Information" form, locate the application type below. The columns to the right of each listed application type note the required plot maps, as labeled in Section I., which are required to be submitted.

A. USDA NRCS Soil Survey Map – The boundaries of all manure application areas.
B. USDA NRCS Soil Survey Map – The location of the waste management system, boundaries of the confined feeding operation, and boundaries of livestock and poultry production areas.
C. USGS Topographic Map – The location of the waste management system, the boundaries of the confined feeding operation, boundaries of livestock and poultry production areas, identify any public water supply wells and public water supply surface intake structures within one thousand (1,000) feet of the manure storage structures, and boundaries of all manure application areas.

II. TOTAL AVAILABLE ACREAGE FOR LAND APPLICATION

A. Considering setbacks, which must be subtracted from the total acres, and any and all other limitations, what is total acreage available for land application? 0.0 Acres

B. On all plot maps submitted showing the boundaries of land application areas, note the total available acreage for land application in each separate area considering the applicable setbacks considering land application method and slope.

III. MARKETING AND DISTRIBUTION

For operations utilizing marketing and distribution of manure, refer to the "Marketing and Distribution of Manure" form contained within this application packet. Review the directions on the form carefully for information regarding when a marketing and distribution waiver may be used.

IV. LAND USE AGREEMENTS

Any acreage identified as part of the minimum required acreage for the application of manure that is not owned by the owner of operation must be document in the operating record via land use agreements.

A. Copies of all land use agreements must accompany construction applications (application types A-D, H-K, and L).
B. The land use agreements must be signed by the property owners on whose property the manure will be applied.
C. Plot maps accompanying construction applications must have the property owner clearly labeled for each land application area submitted.

V. APPLICATION TYPE AND REQUIRED PLOT MAPS

As directed in Section I. above, based on the application type determined in the "Application Type and Requirements Worksheet" and noted on the "General Information" form, locate the application type below. The columns to the right of each listed application type note the required plot maps, as labeled in Section I., which are required to be submitted.

V. APPLICATION TYPE AND REQUIRED PLOT MAPS *(Continued)*

Application Type		Required Plot Maps (as Labeled in Section I.) A	B	C
CFO Approval – Construction and/or Operation (Including Renewals)				
A.	Completely New Operation (Currently Undeveloped Site)	Yes	Yes	Yes
B.	Existing Operation Without Existing CFO Approval			
C.	Existing Operation with Expired CFO Approval			
D.	Expansion of Operation with Current CFO Approval			
E.	Amendment of Existing CFO Approval – Permit Condition		No	No
F.	Amendment of Existing CFO Approval – Change in the type or number of animals that increases manure production			
G.	CFO Approval Renewal/Manure Management Plan		Yes	
NPDES CAFO Individual Permit – Construction and Permit Coverage				
H.	Completely New Operation (Currently Undeveloped Site)	Yes	Yes	Yes
I.	Existing Operation without Current CFO Approval or NPDES Permit			
J.	Existing Operation with Current CFO Approval			
K.	Current NPDES CAFO Individual Permit Holder Proposing Construction			
NPDES CAFO Individual Permit - Permit Modification				
L.	Construction or Expansion of Storage or Animals – No Permit Extension	Yes	Yes	Yes
..	No Construction or Expansion of Storage or Animals – No Permit Extension			No
NPDES CAFO Individual Permit – Renewal				
N.	Renewal Coverage for Operation with Current NPDES CAFO Individual Permit	Yes	Yes	No

RECEIVED
JUL 28 2017
DEPARTMENT OF
ENVIRONMENTAL MANAGEMENT
OFFICE OF LAND QUALITY

Component Text

Whitley County, Indiana

Map unit: Co - Coesse silty clay loam

Componet: Coesse

The Coesse component makes up 100 percent of the map unit. Slopes are 0 to 2 percent. This component is on depressions on till plains. The parent material consists of clayey alluvium over clayey lacustrine deposits. Depth to a root restrictive layer is greater than 60 inches. The natural drainage class is very poorly drained. Water movement in the most restrictive layer is moderately low. Available water to a depth of 60 inches is high. Shrink-swell potential is moderate. This soil is not flooded. It is occasionally ponded. A seasonal zone of water saturation is at 3 inches during January, February, March, April, May, June, July, August, October, November, December. Organic matter content in the surface horizon is about 3 percent. Nonirrigated land capability classification is 2w. This soil meets hydric criteria.

Map unit: GsB2 - Glynwood loam, 2 to 6 percent slopes, eroded

Componet: Glynwood

The Glynwood component makes up 85 percent of the map unit. Slopes are 2 to 6 percent. This component is on till plains, end moraines on till plains. The parent material consists of Wisconsin till derived from limestone and shale. Depth to a root restrictive layer, densic material, is 25 to 37 inches. The natural drainage class is moderately well drained. Water movement in the most restrictive layer is low. Available water to a depth of 60 inches is low. Shrink-swell potential is moderate. This soil is not flooded. It is not ponded. A seasonal zone of water saturation is at 18 inches during January, February, March, April, May, December. Organic matter content in the surface horizon is about 2 percent. Nonirrigated land capability classification is 2e. This soil does not meet hydric criteria. The calcium carbonate equivalent within 40 inches, typically, does not exceed 26 percent.

Map unit: MxC3 - Morley clay loam, 5 to 12 percent slopes, severely eroded

Componet: Morley, severely eroded

The Morley, severely eroded component makes up 100 percent of the map unit. Slopes are 5 to 12 percent. This component is on till plains. The parent material consists of clayey till. Depth to a root restrictive layer, densic material, is 20 to 40 inches. The natural drainage class is moderately well drained. Water movement in the most restrictive layer is low. Available water to a depth of 60 inches is low. Shrink-swell potential is moderate. This soil is not flooded. It is not ponded. A seasonal zone of water saturation is at 33 inches during January, February, March, April, December. Organic matter content in the surface horizon is about 2 percent. Nonirrigated land capability classification is 4e. This soil does not meet hydric criteria. The calcium carbonate equivalent within 40 inches, typically, does not exceed 28 percent.

RECEIVED
JUL 28 2017
DEPARTMENT OF
ENVIRONMENTAL MANAGEMENT
OFFICE OF LAND QUALITY

Adlock Broilers LLC

Whitley Co Soil Types

- Co
- GsB2
- MxC3

250 W

RECEIVED
JUL 28 2017
DEPARTMENT OF
ENVIRONMENTAL MANAGEMENT
OFFICE OF LAND QUALITY

0 200 400
feet

N

Adlock Broilers LLC

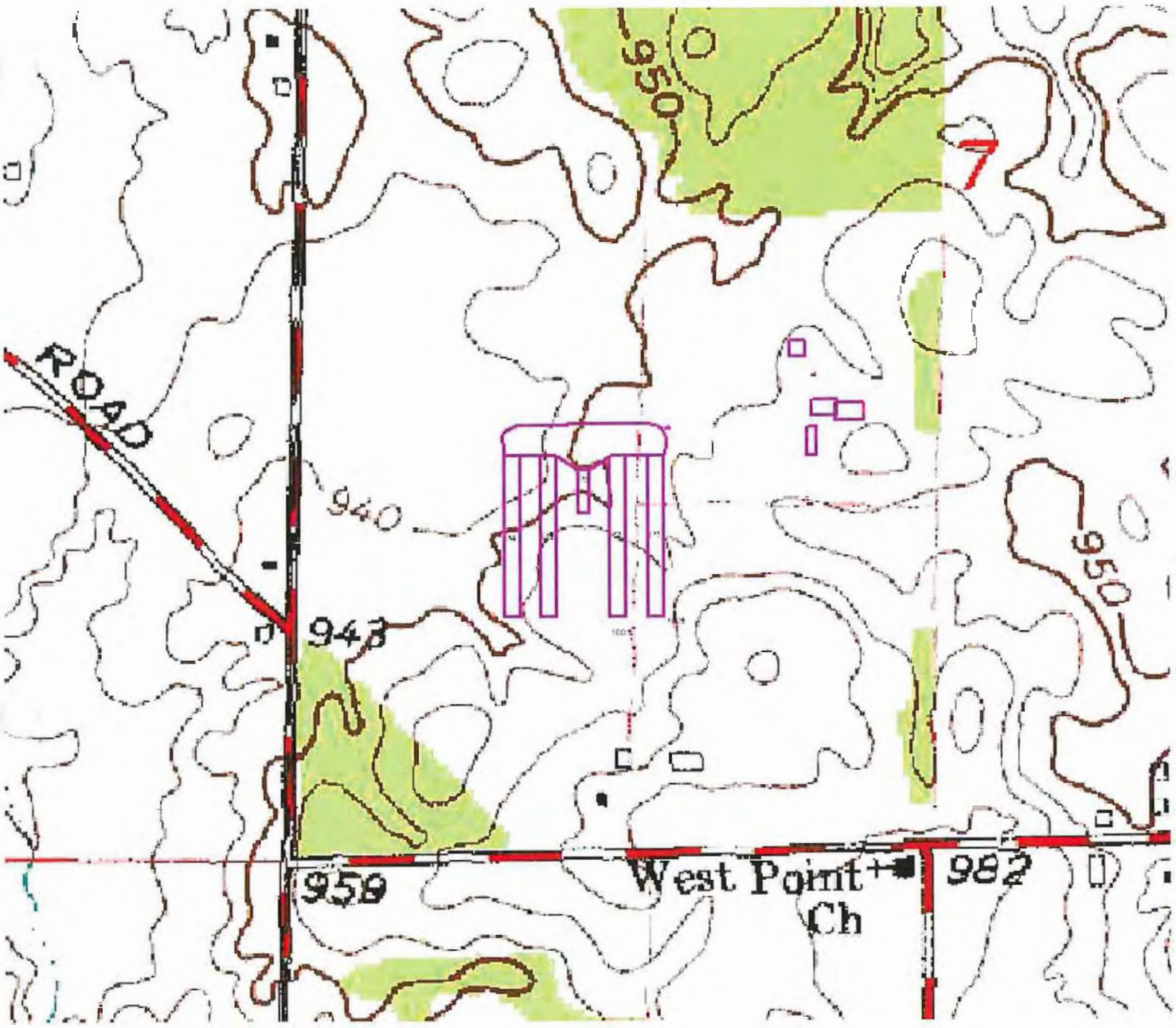

USGS Topographic Map

RECEIVED
JUL 28 2017
DEPARTMENT OF
ENVIRONMENTAL MANAGEMENT
OFFICE OF LAND QUALITY

0 500 1000
feet

IDEM

Indiana Department of Environmental Management

FARMSTEAD PLAN

For:

Adlock Broilers, LLC
P.O. Box 987
Columbia City, IN 46725
Whitley County
(Mailing Address)

RECEIVED
JUL 28 2017
DEPARTMENT OF
ENVIRONMENTAL MANAGEMENT
OFFICE OF LAND QUALITY

Prepared By:

Agronomic Solutions, LLC
Melissa Lehman
7070 S 500 W
Topeka, IN 46571
(260) 593-2092

CFO / CAFO APPLICATION PACKET
Farmstead Plan

Part of State Fonn 55051 (R2 / 6-15)
Approved by State Board of Accounts, 2015
Confined Feeding Operation (CFO)
National Pollutant Discharge Elimination System Concentrated Animal Feeding Operation (NPDES CAFO)

INDIANA DEPARTMENT OF ENVIRONMENTAL MANAGEMENT
Confined Feeding Section
Office of Land Quality
100 North Senate Avenue
MC 65-45, IGCN 1101
Indianapolis, Indiana 46204
(800) 451-6027 extension 2-4473

INSTRUCTIONS: *Refer to the "Application Types and Requirements Worksheet" to determine if a Farmstead Plan is required for the type of application you are submitting. Prepare a Farmstead Plan that meets the requirements noted in the Section I Farmstead Plan Checklist. Attach the Farmstead Plan to this form. Complete the Facility Detail Information in Section IV using the Section II checklist and the examples in Section III. Check the boxes next to each item in Sections I and II as you verify that the Farmstead Plan and Facility Detail Information sheets are complete.*

I. FARMSTEAD PLAN CHECKLIST

☒ A. The farmstead plan must be on a sheet no less than $8^1/_2$ inches by 11 inches in size.

☒ B. The farmstead plan must show all existing and proposed waste management systems, and all of the following features within 500 feet of the waste management systems (label each feature):

1. Residences
2. Surface waters of the state
3. Public and private roads
4. Water well locations
5. Characteristics of karst terrain as identified in 327 IAC 19-2-24
6. Drainage patterns
7. Property boundary line
8. All outlets of known tile drains or any other type of subsurface or surface drainage outlet
9. Drainage inlets, including water and sediment control basins showing their outlets, and ponds with outlets
10. Mortality management sites

RECEIVED
JUL 28 2017
DEPARTMENT OF ENVIRONMENTAL MANAGEMENT
OFFICE OF LAND QUALITY

☒ C. The farmstead plan must be legible and either:

1. Drawn to approximate scale; or
2. Show specific distances between the waste management systems and the features listed immediately above in section B that are within 500 feet of the existing or proposed waste management system.

II. FACILITY DETAIL INFORMATION CHECKLIST

Using the instructions below, complete the Section IV. Facility Detail Information sheet for all confinement and waste structures present or proposed at the site. If the rows of the provided Section IV. Facility Detail Information sheet are not properly sized for your needs, you may create your own table with the same column headers and required information listed below.

☒ A. Label the Farmstead Plan – The waste management systems (confinement and waste structures) must be uniquely identified on the farmstead plan. Existing structures should be labeled with an "E". Proposed structure should be labeled with a "P". After labeling each building with a "P" or "E", number the structures. Your structures should be labeled as "E1", "E2", "E3", etc; or "P1", "P2", "P3", etc; or a combination of the two. Other unique labeling systems will be accepted.

☒ B. Animal Type – Animal type(s) listed on Animal Information Attachment.

☒ C. Number of Animals – The MAXIMUM APPROVED CAPACITY of the unit at any one time.

☒ D. Solid or Liquid – Denote if the manure in the unit is handled as a solid or liquid.

☒ E. Date Constructed – List the approximate date of construction for existing waste storage structures.

☒ F. Water Uses (gallons/unit of time) – If the inside of the building is washed, indicate how much water is used and how often the bulding is cleaned. Also include any excess non-contact cooling water or drinking water directed to the waste management system.

☒ G. Brief Description – Provide a brief description of the facility and waste management system. Indicate if the unit shares manure storage with another unit (i.e. common lagoon system, slurry store, etc.). **Previously approved structues must have the approval number and date approved listed.**

RECEIVED
JUL 28 2017
DEPARTMENT OF
ENVIRONMENTAL MANAGEMENT
OFFICE OF LAND QUALITY

INDIANA DEPARTMENT OF
ENVIRONMENTAL MANAGEMENT
Confined Feeding Section
Office of Land Quality
100 North Senate Avenue
MC 65-45, IGCN 1101
Indianapolis, Indiana 46204
(800) 451-6027 extension 2-4473

CFO / CAFO APPLICATION PACKET
Animal Capacity

Part of State Form 55051 (R2 / 6-15)
Approved by State Board of Accounts, 2015
Confined Feeding Operation (CFO)
National Pollutant Discharge Elimination System Concentrated Animal Feeding Operation (NPDES CAFO)

INSTRUCTIONS: *Complete the table below by listing the total approved capacity of animals confined by the provided animal type listed. For applications which include a construction or expansion proposal, the total number of animals listed should reflect the total proposed maximum for any forty-five (45) day period within a twelve (12) month period as described on the Facility Detail Sheet submitted with the application. For renewal applications, the total number of animals listed should reflect the total approved animal capacity.*

ANIMAL INFORMATION

Animal Type		Total Approved Animal Capacity
Swine *Weighing More Than Fifty-five (55) Pounds*	Finishers	
	Sows	
	Boars	
Swine *Weighing Less Than Fifty-five (55) Pounds*	Nursery Pigs	
Cattle or Cow/Calf Pairs	Beef Cattle	
	Beef Calves	
	Dairy Heifers	
	Dairy Calves	
Mature Dairy Cattle	Dairy Cattle	
Veal Calves	Veal Calves	
Chickens Other than Laying Hens *Other Than a Liquid Manure Handling System*	Pullets	
	Broilers *Dry*	160,000
Laying Hens and Broilers *Liquid Manure Handling System*	Broilers *Liquid*	
	Layers *Liquid*	
Laying Hens *Other Than a Liquid Manure Handling System*	Layers *Dry*	
Turkeys	Toms	
	Hens	
	Poults (0 to 5 Weeks old)	
Ducks *Other Than a Liquid Manure Handling System*	Ducks *Dry*	
Ducks *Liquid Manure Handling System*	Ducks *Liquid*	
Sheep and Lambs		
Horses		
Other *Specify:*		
Total		160,000

Facility Detail Sheet

Label on Farmstead Map	Animal type	Number of Animals	Solid or Liquid	Date Constructed (for existing buildings)	Water Uses (gal/unit of time)	Brief Description:
P1	Broilers	40,000	Solid	Proposed	Drinking Only	A 60'x600' barn with pole barn construction sides and roof. The floor consists of compacted clay. The barn has a capacity of 36,000 ft^3, which provides 257 days of manure storage. The barn will be bedded with sawdust & composted between batches. The barn will be spread as needed to keep the manure depth at 4-6".
P2	Broilers	40,000	Solid	Proposed	Drinking Only	A 60'x600' barn with pole barn construction sides and roof. The floor consists of compacted clay. The barn has a capacity of 36,000 ft^3, which provides 257 days of manure storage. The barn will be bedded with sawdust & composted between batches. The barn will be spread as needed to keep the manure depth at 4-6".
P3	Broilers	40,000	Solid	Proposed	Drinking Only	A 60'x600' barn with pole barn construction sides and roof. The floor consists of compacted clay. The barn has a capacity of 36,000 ft^3, which provides 257 days of manure storage. The barn will be bedded with sawdust & composted between batches. The barn will be spread as needed to keep the manure depth at 4-6".
P4	Broilers	40,000	Solid	Proposed	Drinking Only	A 60'x600' barn with pole barn construction sides and roof. The floor consists of compacted clay. The barn has a capacity of 36,000 ft^3, which provides 257 days of manure storage. The barn will be bedded with sawdust & composted between batches. The barn will be spread as needed to keep the manure depth at 4-6".
P5			Solid	Proposed		40'x164' solid manure storage barn that is covered and completely enclosed. This building has a reinforced concrete floor and 6ft sidewalls. The useable capacity for this storage will be 52,480 ft^3 or 1,180 tons based on an 8ft stacking height. This storage will receive manure from the P1-P4 broiler barns. This storage will be built in two stages, 40'x82' will be built when P1 & P2 are built and then the rest of the building will be built when P3 & P4 are built.
						Mortality Management: The producer is planning on composting his dead animals. The animals will be removed within 24 hours of death and taken to the concrete floored covered compost area. Please see site map for location.

RECEIVED
JUL 28 2017
DEPARTMENT OF
ENVIRONMENTAL MANAGEMENT
OFFICE OF LAND QUALITY

Adlock Broilers LLC

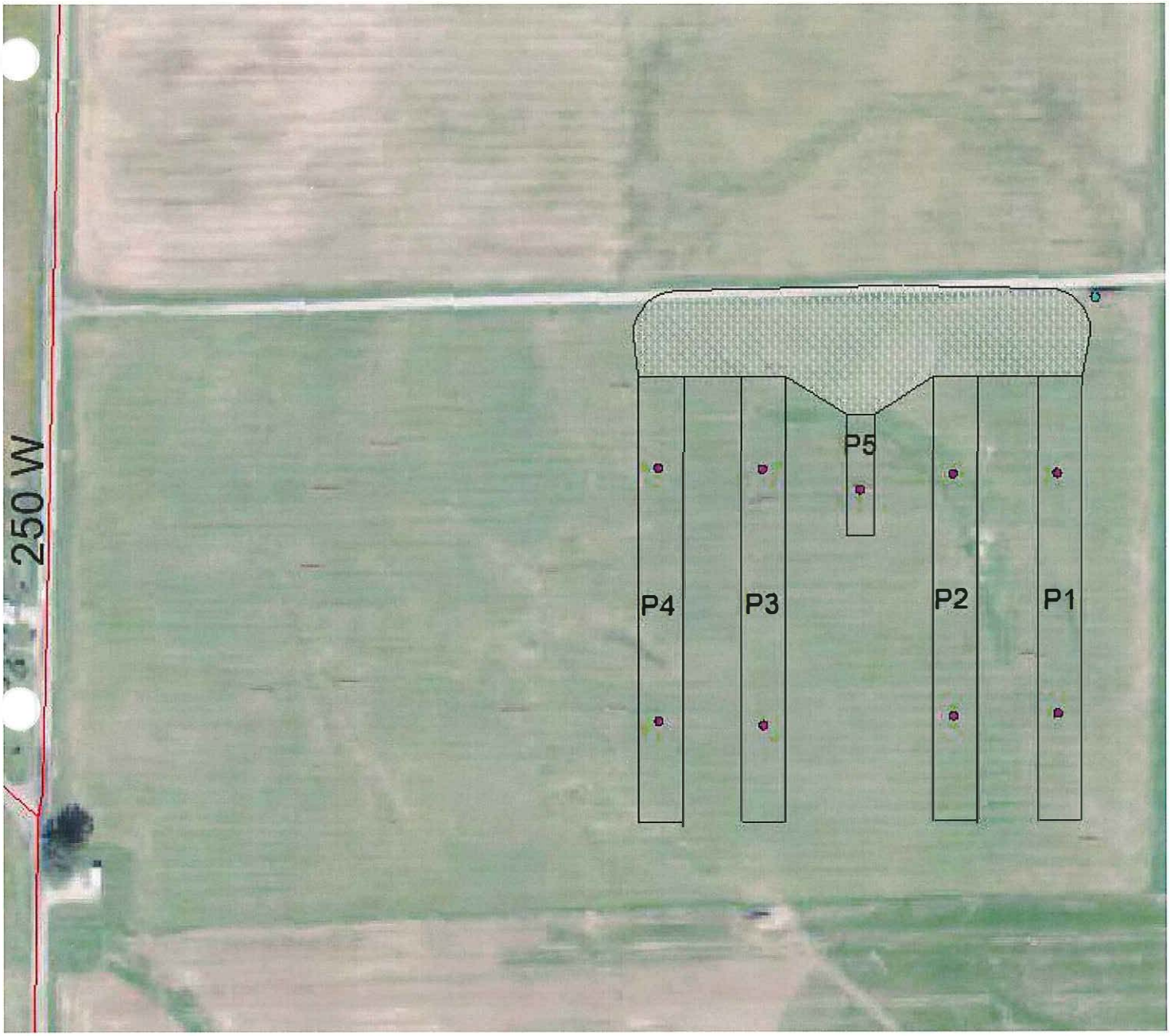

Site Map

- Proposed Driveway
- Soil Boring Pt
- Well

Site Map

5300 N 250 W
Columbia City, IN 46725

See Facility Detail for proposed structures

RECEIVED
JUL 28 2017
DEPARTMENT OF
ENVIRONMENTAL MANAGEMENT
OFFICE OF LAND QUALITY

0 200 400
feet

N

35

Adlock Broilers, LLC

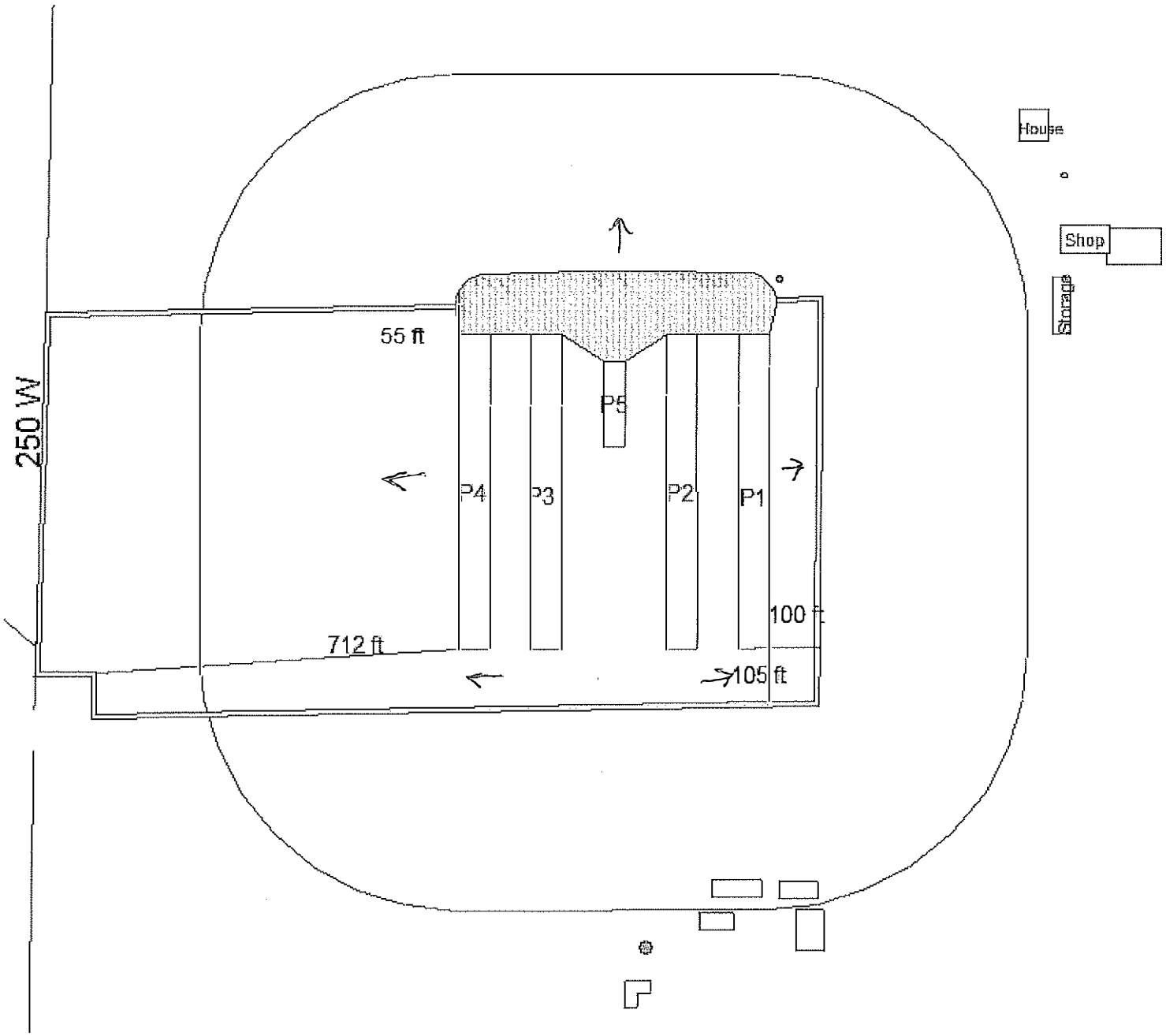

Site Plan

- Property Line
- Proposed Driveway
- Surface Water
- Well

Farmstead Plan

Building/Features within 500ft of Manure System

See Facility Detail Sheet for Existing and Proposed Structures

RECEIVED
JUL 28 2017
DEPARTMENT OF
ENVIRONMENTAL MANAGEMENT
OFFICE OF LAND QUALITY

0 250 500
feet

N

3l

Adlock Broilers LLC

July 18, 2017

1:4,000

0 0.0325 0.065 0.13 mi

0 0.05 0.1 0.2 km

- Wetlands NWI (USFWS)
- Wetlands Project Metadata NWI (USFS)

Floodplains - FIRM

- Floodway
- 1% Annual Chance Flood Hazard
- 0.2% Annual Chance, Protected by Levee
- 0.2% Annual Chance Flood Hazard
- Rivers (NHD)
- Lakes (NHD)
- Streams (NHD)
- Karst Springs
- Mines - Surface
- Mines - Underground

U.S. Geological Survey
U.S. Fish and Wildlife Service (USFWS),National Standards and Support Team,National Wetlands Inventory (NWI)
Indiana Department of Transportation, Business Information and Technology Systems, GIS Mapping; U.S Census Bureau, TIGER/Line

IDEM

Indiana Department of Environmental Management

WASTE MANAGEMENT SYSTEM

For:

Adlock Broilers, LLC
P.O. Box 987
Columbia City, IN 46725
Whitley County
(Mailing Address)

Prepared By:

Agronomic Solutions, LLC
Melissa Lehman
7070 S 500 W
Topeka, IN 46571
(260) 593-2092

RECEIVED
JUL 28 2017
DEPARTMENT OF
ENVIRONMENTAL MANAGEMENT
OFFICE OF LAND QUALITY

Adlock Broilers, LLC
P.O. Box 987
Columbia City, IN 46725
Whitley County

Construction Details

Attached is a general building drawing of the proposed 60'x600' Pine Manor broiler barn on pages 45-46.

There the actual manure storage or area where the birds will be is 600' x 60'. This area equals 36,000 ft^3 of manure storage. The barns themselves provide more than adequate manure storage with 257 days. The producer is planning to add a covered litter stack concrete pad and walls for manure storage. The Pine Manor production schedule is very flexible as to when you must clean out your barn. They just run a groomer or composter through the barn between batches of birds and add new sawdust. Then after several batches and when the land is suitable for land applications a windrow of the barn will be removed to lower the litter base level.

Compacted Clay Liner

The floor for the barn will be made from the clay soil brought in from the excavator offsite. This will be made by packing two separate lifts of clay soil 8-9" compacted to 6". So the finished clay liner will be 12" in depth. The clay liner will be made according to the Design Standards for Solid Manure Storage Structures section 4) which reads:

> 4) If an earthen floor is used, the pad should be compacted to at least 90% of the maximum density as determined by the standard Proctor Test, ASTM D 698. One of the following three methods should be used to ensure compaction:
>
> a) Tamping (Sheepsfoot) Roller – Minimum of 3 passes with a contact pressure of at least 100 pounds per square inch (psi), towed at speeds not exceeding 5 miles per hour(mph).
>
> b) Pneumatic (Rubber Tire) Roller – Minimum of 3 passes with a wheel load of at least 18,00 pounds and a tire pressure of 80 psi, towed at a speed not exceeding 5 mph.
>
> c) Loaded Earth Moving Equipment – Minimum of 3 passes with a wheel load of at least 10psi, towed at speeds not exceeding 5 mph.

RECEIVED
JUL 28 2017
DEPARTMENT OF
ENVIRONMENTAL MANAGEMENT
OFFICE OF LAND QUALITY

CFO / CAFO APPLICATION PACKET
Construction

Part of State Form 55051 (R2 / 6-15)
Approved by State Board of Accounts, 2015
Confined Feeding Operation (CFO)
National Pollutant Discharge Elimination System Concentrated Animal Feeding Operation (NPDES CAFO)

RECEIVED
JUL 28 2017
DEPARTMENT OF ENVIRONMENTAL MANAGEMENT
OFFICE OF LAND QUALITY

INDIANA DEPARTMENT OF ENVIRONMENTAL MANAGEMENT
Confined Feeding Section
Office of Land Quality
100 North Senate Avenue
MC 65-45, IGCN 1101
Indianapolis, Indiana 46204
(800) 451-6027 extension 2-4473

INSTRUCTIONS: *Refer to the "Application Types and Requirements Worksheet" to determine if Construction information is required for the type of application you are submitting. Complete Section I. Prepare construction drawings and the other construction information listed in this form using the checklists in Sections II. through XV. Use the check boxes to indicate whether each item is addressed or if it is not applicable to your application. The checklists cover the construction details required in the Confined Feeding Operations rule, 327 IAC 19. The instructions give you the rule citation for each section. It is helpful to refer to the rule, when completing this form. You can view the Indiana Code (IC) and Indiana Administrative Code (IAC) references in this form at iga.IN.gov. IC references are under the "Laws" link. IAC references are under the "Publications" link. This form is required and supersedes all previous versions. IDEM will not accept substitutes, altered, or previously supplied forms.*

I. OPERATION LOCATION INFORMATION

A. Complete the operation location information below using the United States Geological Survey (USGS) topographic map the operation is shown upon.

Lorane NE	7	T32N	R9E
USGS Quadrangle	Section	Township	Range

B. In space below provide detailed directions from the nearest town to the site of the operation:

From Columbia City, take SR 109 north to 500 N. Turn left onto 500 N and head west about 2 1/2 miles to 250 W. Turn right onto 250 W and head north a 1/4 mile. The farm is on the east side of the road back a long lane.

II. WASTE MANAGEMENT SYSTEM DRAWINGS CHECKLIST

Review the waste management system drawing requirements in 327 IAC 19-7-4 and answer the questions below.

		Yes	No	N/A
A.	Is a design drawing included for all structures proposed (new/expanded production structure or manure storage structure) or existing (previously unapproved or expired) above what is listed in a current CFO approval or NPDES CAFO permit?	☒	☐	☐
B.	Do the waste management system drawings show detailed views and cross sections to define all dimensions and construction materials?	☒	☐	☐
C.	Do all systems relying on **gravity flow** provide the required elevations of the entire waste management system that relies on gravity?	☐	☐	☒

III. SOIL BORINGS CHECKLIST

Review the soil and water table information requirements in 327 IAC 19-7-1(c)(6) and answer the questions below.

		Yes	No	N/A
A.	Is the soil and water table information for the test holes for proposed manure storage structures provided from a soil scientist certified under the Federation of Certified Board of Agriculture, Biology, Earth and Environmental Sciences, a professional geologist certified in Indiana under IC 25-17.6, or a professional engineer registered in Indiana?	☒	☐	☐
B.	Are the number of test holes sufficient to adequately characterize the seasonal water table and soil? • For earthen solid manure storage structures, at least two (2) test holes for a structure up to one (1) acre in size, then an additional hole for each additional half acre. • For liquid manure storage structures, at least two (2) holes for a structure up to one-half acre, then an additional hole for each additional half acre. • For concrete solid manure storage structures, at least two (2) holes regardless of size.	☒	☐	☐
C.	Are all test holes for concrete manure storage structures at least two (2) feet below the base of the structure?	☒	☐	☐
D.	Are all test holes for earthen manure storage structures in non-karst areas at least five (5) feet below the base of the structure?	☒	☐	☐
E.	Is at least one test hole for earthen manure storage structures in karst areas to either bedrock or ten (10) feet below base of structure, whichever is shallower?	☐	☐	☒

IV. NEW WASTE MANAGEMENT SYSTEMS SITE RESTRICTIONS CHECKLIST

Review the site restrictions specifically listed in 327 IAC 19-12-2 and answer the questions below.

		Yes	No	N/A
A.	Is the new waste management system proposed in karst terrain?	☐	☒	☐
B.	Is the new waste management system proposed over mines? (underground and reclaimed surface mines)	☐	☒	☐
C.	If the response to either A. and/or B. above is "Yes", does the application contain the information requested in 327 IAC 19-12-2(b)?	☐	☐	☒
D.	Is the new waste management system proposed in a one hundred (100) year flood plain?	☐	☒	☐

E. If the response to D. above is "Yes", 327 IAC 19-12-2(a)(3) requires:

1. The access to the waste management system to be at least two (2) feet above the one hundred (100) year flood elevation; and
2. The management system is structurally sound without lowering the flood waters or seasonal water table to below the bottom of the waste management system.

Please provide the information below:

_____ Feet Above Mean Sea Level	_____ Feet Above Mean Sea Level
Elevation of 100 year flood plain	Elevation of access to waste management system

F.	Is any portion of the waste management system located below the seasonal high water table?	☐	☒	☐
G.	If the response to F. above is "Yes", does the application show the drainage system, provide details how the water table is lowered and maintained below the base of the waste management system (including proper drainage location, elevation of the entire waste management system, sizing, pumps and emergency power sources if necessary), and show the access point for sampling?	☐	☐	☒

WASTE MANAGEMENT SYSTEM SETBACKS CHECKLIST

A. Does the waste management system comply with the following setbacks detailed in 327 IAC 19-12-3(a), (b), and (e)?

	Identifiable Feature at Time of Application	Setback Distance *(feet)*		Yes	No *(see B.)*	N/A
		All Waste Management Systems	Solid Manure Storage Structures per 327 IAC 19-12-3(b)			
1.	Public water supply well (existing or planned)	1,000	1,000	☒	☐	☐
2.	Public water supply intake surface intake structure	1,000	1,000	☒	☐	☐
3.	Existing off-site residential and public buildings	400	400	☒	☐	☐
4.	Surface waters of the state	300	100	☒	☐	☐
5.	Drainage inlets (including water and sediment control basins)	300	100	☒	☐	☐
6.	Sinkholes (as measured from the surficial opening or the lowest point of the feature)	300	100	☒	☐	☐
7.	Off-site water wells	300	100	☒	☐	☐
8.	On-site water wells	100	100	☒	☐	☐
9.	Property lines	100	100	☒	☐	☐
10.	Public Roads	100	100	☒	☐	☐

RECEIVED
JUL 28 2017
DEPARTMENT OF ENVIRONMENTAL MANAGEMENT
OFFICE OF LAND QUALITY

B.	327 IAC 19-12-3(c) and (d) allow for reduced setbacks than listed in A. Does the application request or demonstrate a reduced setback?	☐	☒	☐

VI. DESIGN REQUIREMENTS FOR ALL NEW WASTE MANAGEMENT SYSTEMS CHECKLIST

	Yes	No	N/A
Is the waste management system designed not to discharge to surface waters of the state? (327 IAC 19-12-4(b))	☒	☐	☐
1. If no, does it have an NPDES CAFO permit under 40 CFR 122.23?	☐	☐	☒

VII. STORAGE CAPACITY REQUIREMENTS FOR ALL NEW MANURE STORAGE FACILITIES CHECKLIST

A. Is the manure storage facility designed with at least a 180 day storage capacity (327 IAC 19-12-4(c)) for the following:	Yes	No	N/A
1. Manure, bedding and other accumulated wastes.	☒	☐	☐
2. Normal precipitation, less evaporation, on the surface area of an open storage	☐	☐	☒
3. Normal runoff draining into the storage, if applicable.	☐	☐	☒
4. Runoff from a twenty-five (25) year, twenty-four (24) hour precipitation event draining into the storage, if applicable.	☐	☐	☒
5. A minimum six (6) inches of storage for residual solids.	☐	☐	☒
6. Two (2) feet of freeboard for open storages.	☐	☐	☒
7. Six (6) inches of freeboard for covered storages.	☒	☐	☐
8. Additional storage as necessary.	☐	☐	☒

VIII. DESIGN REQUIREMENTS FOR ALL NEW LIQUID MANURE STORAGE FACILITIES CHECKLIST

Is the liquid manure storage facility designed according to the Indiana NRCS Conservation Practice Standard Code 313, Waste Storage Facility, September 2005? (327 IAC 19-12-4(d))	Yes	No	N/A
	☐	☐	☒

If no, provide an explanation.

Note: If submitting an alternative compliance approach request for approval, see Section XXI for the requirements.

327 IAC 19-12-4(d) requires the liquid manure storage facility be certified upon completion of construction by an Indiana professional engineer on an IDEM certification form to be submitted with the construction affidavit within thirty (30) days of the completion of construction.

IX. DESIGN REQUIREMENTS FOR ALL NEW CONCRETE STORAGE FACILITIES FOR LIQUID MANURE CHECKLIST

A. Does the design of the concrete liquid manure storage facility comply with the design standards of Mid West Plan Service-36: Rectangular Concrete Manure Storages, 2nd Edition 2005 or TR-9: Circular Concrete Manure Tanks, March 1998? (327 IAC 19-12-4(e))	Yes	No	N/A
	☐	☐	☒

If no, provide an explanation.

RECEIVED
JUL 28 2017
DEPARTMENT OF
ENVIRONMENTAL MANAGEMENT
OFFICE OF LAND QUALITY

B. Does the application contain the Indiana NRCS Concrete Construction Specification, October 2005? (327 IAC 19-12-4(e))	Yes	No	N/A
	☐	☐	☒

If no, provide an explanation.

C. Does the application contain drawings for the concrete liquid manure storage facility that include:	Yes	No	N/A
1. Joints properly sized and spaced.			
2. Reinforcing steel adequately sized and spaced.	☐	☐	☒
3. A foundation that provides necessary support.			
4. Waterstops properly located and specified.			

X. DESIGN REQUIREMENTS FOR ALL NEW EARTHEN STORAGE FACILITIES FOR LIQUID MANURE CHECKLIST

A. Does the pond or lagoon clay liner comply with the maximum seepage rate of 1/16 cubic inch per square inch per day? (327 IAC 19-12-5)	Yes	No	N/A
	☐	☐	☒

If no, provide an explanation.

B. Does the pond or lagoon have a flexible membrane liner or modified soil liner that complies with the appropriate specification identified in 327 IAC 19-12-5(b)(1) (2) or (3)?	Yes	No	N/A
	☐	☐	☒

XI. DESIGN REQUIREMENTS FOR MANURE STORAGE TANKS CHECKLIST

Note: Underground steel storage tanks are prohibited.

es the plastic or fiberglass tank and/or above ground steel tank comply with the requirements in 327 IAC 19-12-4(k)?	Yes	No	N/A
	☐	☐	☒

If no, provide an explanation.

XII. DESIGN REQUIREMENTS FOR ALL NEW EARTHEN WASTE TREATMENT LAGOONS CHECKLIST

Does the earthen waste treatment lagoon comply with the design requirements with NRCS Code 359? (327 IAC 19-12-4(f))	Yes	No	N/A
	☐	☐	☒

RECEIVED
JUL 28 2017
DEPARTMENT OF
ENVIRONMENTAL MANAGEMENT
OFFICE OF LAND QUALITY

If no, provide an explanation.

XIII. DESIGN REQUIREMENTS FOR ALL NEW SOLID MANURE STORAGE FACILITIES CHECKLIST

A. An earthen floor without a liner may be used if the following requirements are satisfied:	Yes	No	N/A
1. Is the earthen floor at least five (5) feet above any sand or gravel soils?	☐	☐	☒
2. Is the seasonal high water table at least five (5) feet below the bottom of the floor?	☐	☐	☒
a. If no, will a perimeter drain be constructed to lower the water table five (5) feet below the bottom of the floor?	☐	☐	☒

		Yes	No	N/A
3.	Will the earthen floor be compacted using a sheepsfoot roller, a rubber tire roller or a loaded earthmover following the compaction specifications identified in the NRCS Construction Specification Earthfill, available at: http://www.nrcs.usda.gov/Internet/FSE_DOCUMENTS/nrcs144p2_030847.pdf?	☐	☐	☒
B.	Will the solid manure storage facility be constructed with either a liner or a five (5) inch thick concrete slab/floor if the storage facility is located in a karst terrain or prohibited soil type (327 IAC 19-12-4(g))?	☒	☐	☐

If no, provide an explanation.

		Yes	No	N/A
C.	Will run-on and precipitation be diverted away from the solid manure storage facility? *If no, the solid manure storage facility must include a method to collect and manage the contaminated run-off.*	☒	☐	☐
D.	Does the structure have a roof? *If no, the solid manure storage facility must include a method to collect and manage the contaminated run-off.*	☒	☐	☐
E.	Is the structure at least two (2) feet above bedrock? *If no, the solid manure storage facility must be constructed with either a liner as described in Section X of this checklist or a five (5) inch thick concrete slab/floor.*	☒	☐	☐

Note: Additional design requirements for solid manure storage facilities may be found in the "Design and Construction Requirements & Site Restrictions for New Waste Management System" section of the Guidance Manual for Indiana's Confined Feeding Program.

XIV. DESIGN REQUIREMENTS FOR ALL OTHER WASTE MANAGEMENT SYSTEMS CHECKLIST

Waste management systems not listed in 327 IAC 19-12-4 must be designed and constructed in accordance with IC 13-18-10-4(b).

	Yes	No	N/A
If the waste management system is not listed in 327 IAC 19-12-4, is it designed under IC 13-18.10-4(b)?	☐	☐	☒

If no, provide an explanation.

XV. DESIGN REQUIREMENTS FOR ALL PIPELINES CHECKLIST

	Yes	No	N/A
Will the pipeline be constructed complying with NRCS Code 634? (327 IAC 19-12-4(i))	☐	☐	☒

If no, provide an explanation.

XVI. VEGETATIVE MANAGEMENT SYSTEMS CHECKLIST

	Yes	No	N/A
Does the vegetative management system comply with NRCS Code 635? (327 IAC 19-12-4(l))	☐	☐	☒

If no, provide an explanation.

RECEIVED
JUL 28 2017
DEPARTMENT OF
ENVIRONMENTAL MANAGEMENT
OFFICE OF LAND QUALITY

XVII. CONSTRUCTED WETLANDS CHECKLIST

	Yes	No	N/A
Does the constructed wetland comply with NRCS Code 656? (327 IAC 19-12-4(m))	☐	☐	☒

If no, provide an explanation.

XVIII. DESIGN REQUIREMENTS FOR PERIMETER DRAINS CHECKLIST

	Yes	No	N/A
Does the perimeter drain system comply with the requirements of 327 IAC 19-12-2(a)(5), 327 IAC 19-12-4(n) and (o)?	☐	☐	☒

If no, provide an explanation.

XIX. ALTERNATE DESIGN CHECKLIST

	Yes	No	N/A
A. Is an alternative design, compliance approach or innovative technology, complying with the requirements of 327 IAC 19-5-1 proposed?	☐	☒	☐
1. If yes, does it include calculations with adequate justification for the alternative design/compliance approach?	☐	☐	☒

RECEIVED
JUL 28 2017
DEPARTMENT OF
ENVIRONMENTAL MANAGEMENT
OFFICE OF LAND QUALITY

FRAMED WALL OPENINGS
P10848: 47" W. x 7-1/2" H. GB36M1: 43" x 43" WF541T1CXP: 56-1/2" W. x 62-1/2" H.
FRAMED CEILING OPENINGS
B127SPM: 25-1/2" x 25-1/2"

NOTE:
DRAFT STOPS TO BE INSTALLED IN ATTIC - PER LOCAL BUILDING CODE

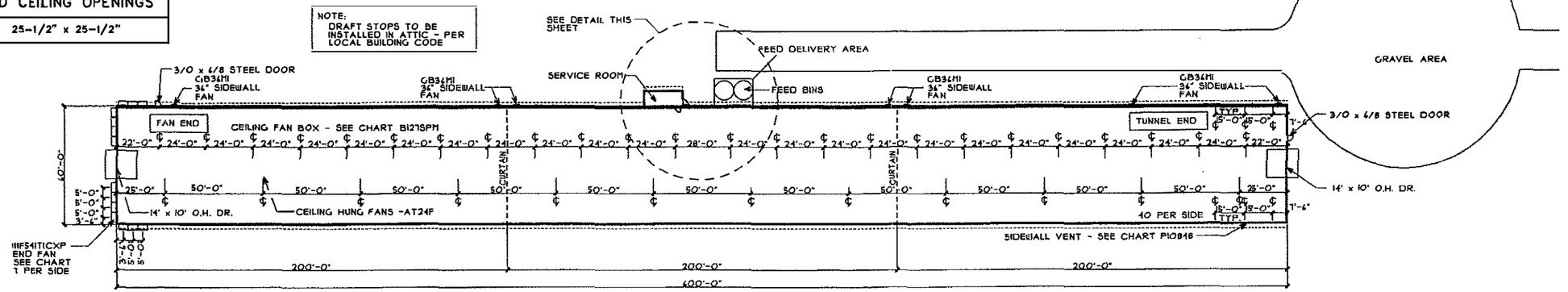

OVERALL PLAN
SCALE : 1" = 30'-0"

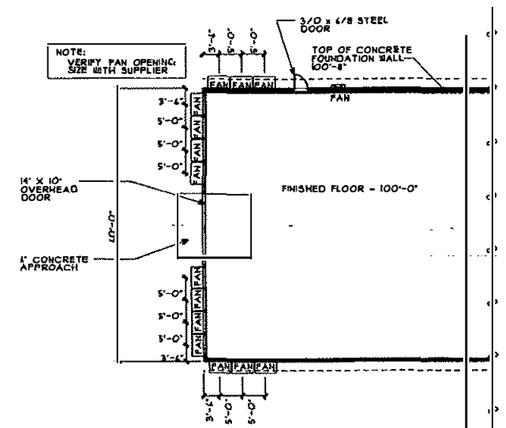

PARTIAL ENLARGE PLAN FAN END
SCALE : 1/16" = 1'-0"

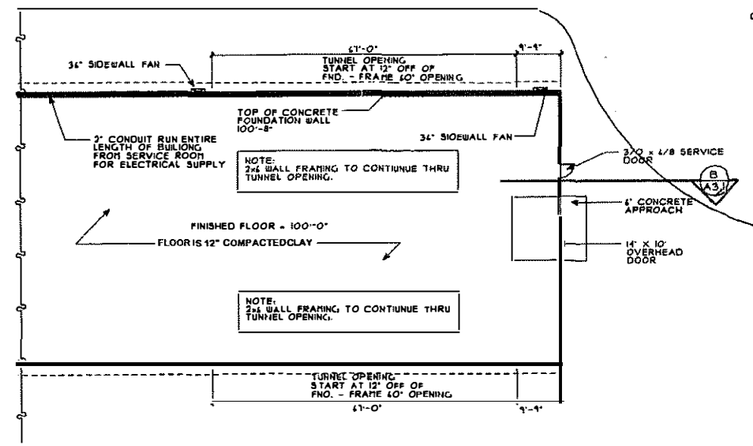

PARTIAL ENLARGE PLAN TUNNEL END
SCALE : 1/16" = 1'-0"

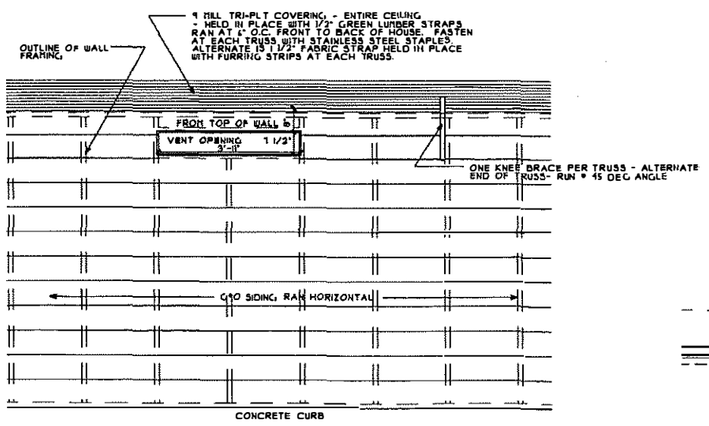

A INTERIOR ELEVATION DETAIL
SCALE: 1/2" = 1'-0"

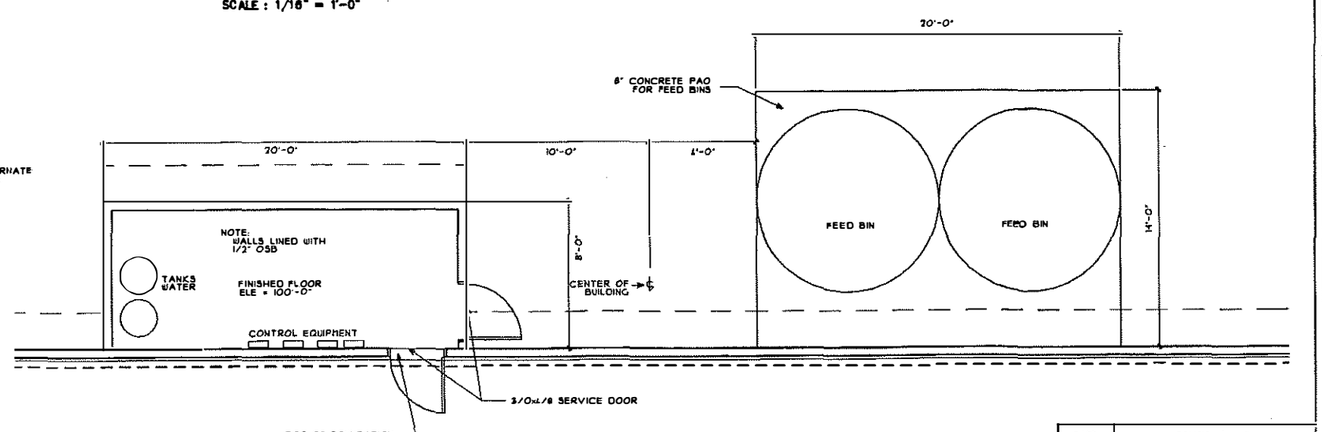

ENLARGE SERVICE ROOM
SCALE : 1/4" = 1'-0"

RECEIVED
JUL 28 2017
DEPARTMENT OF ENVIRONMENTAL MANAGEMENT OFFICE OF LAND QUALITY

GENERAL NOTES

- ALTHOUGH DRAWINGS ARE DRAWN TO SCALE, THE ACCURACY OF THE DRAWING CANNOT BE GUARANTEED DUE TO DISCREPANCIES IN THE METHODS OF REPRODUCTION. DIMENSIONS SHOULD BE DERIVED FROM DIMENSIONED PLANS.
- ALL DIMENSIONS, ROUGH OPENING SIZES, AND ELEVATION MARKERS MUST BE FIELD VERIFIED BY THE GENERAL CONTRACTOR. MAUST, ARCHITECTURAL SERVICES SHALL NOT BE HELD RESPONSIBLE FOR ANY DIMENSIONAL DISCREPANCIES WHICH HAVE NOT BEEN BROUGHT TO THEIR ATTENTION PRIOR TO CONSTRUCTION.

MAUST ARCHITECTURAL SERVICES
DIVISION OF L.E.M., INC.
112 NORTH MAIN STREET
GOSHEN, INDIANA 46526
* Architects
* Planners
* Consultants
* Construction Mgmt.
* Rule 5 and MS4 Filing
PHONE (574) 537-8500
FAX (574) 537-0808

These drawings are the property of Maust Architectural Services and may not be reprinted, copied or reused in any manner without the expressed written consent of Maust Architectural Services.

MILLER POULTRY PROTOTYPE
60' x 600'
NON-CURTAIN SIDED BROILER BARN

PLANS

DRAWN :	CHECKED :
DATE : 1/31/2011	
SCALE : AS NOTED	
JOB NO. : MAS 10-105	
SHEET A1.1 OF	

DATE	REVISION/ISSUE
12/10/10	REVISED PER MARK/AJ

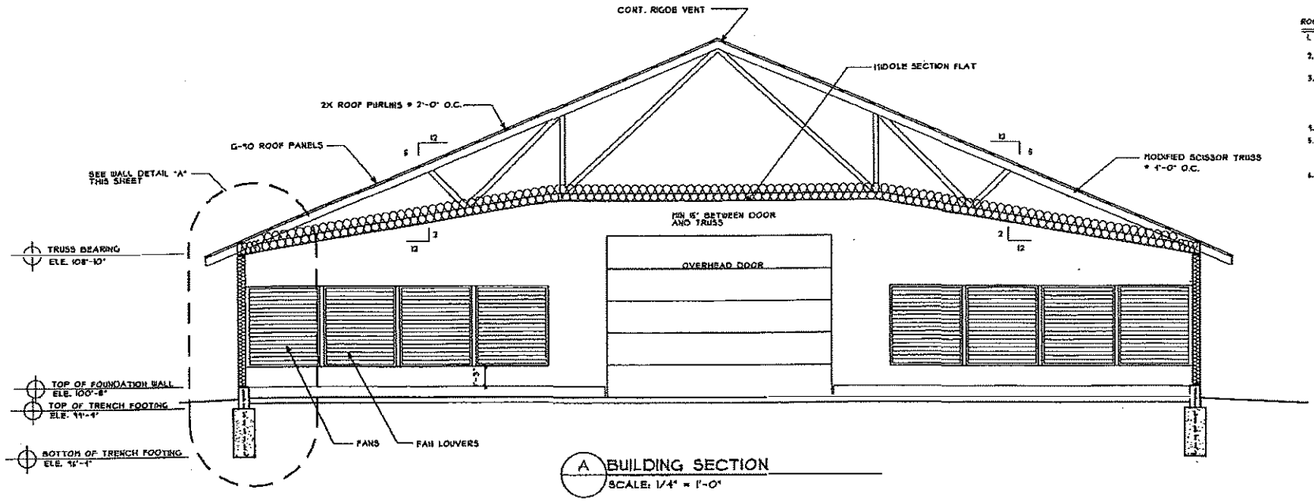

A BUILDING SECTION
SCALE: 1/4" = 1'-0"

NOTE:
TRUSS PROFILES ARE SHOWN ONLY TO GIVE THE BASIC INTENT OF THE DESIGN. THERE HAS BEEN NO ATTEMPT TO REPRESENT ALL TRUSS PROFILES. TRUSS PROFILES HAVE BEEN PROVIDED ONLY TO INDICATE THE THE DESIRED ROOF PITCHS, HEAT HEIGHTS AND OVERHANGS. ALL TRUSSES ARE TO BE DESIGNED AND CERTIFIED BY AN ENGINEER LICENSED IN THE STATE OF INDIANA.

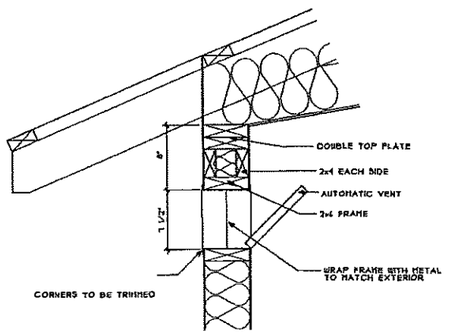

A AUTOMATIC VENT DETAIL
SCALE: 1 1/2" = 1'-0"

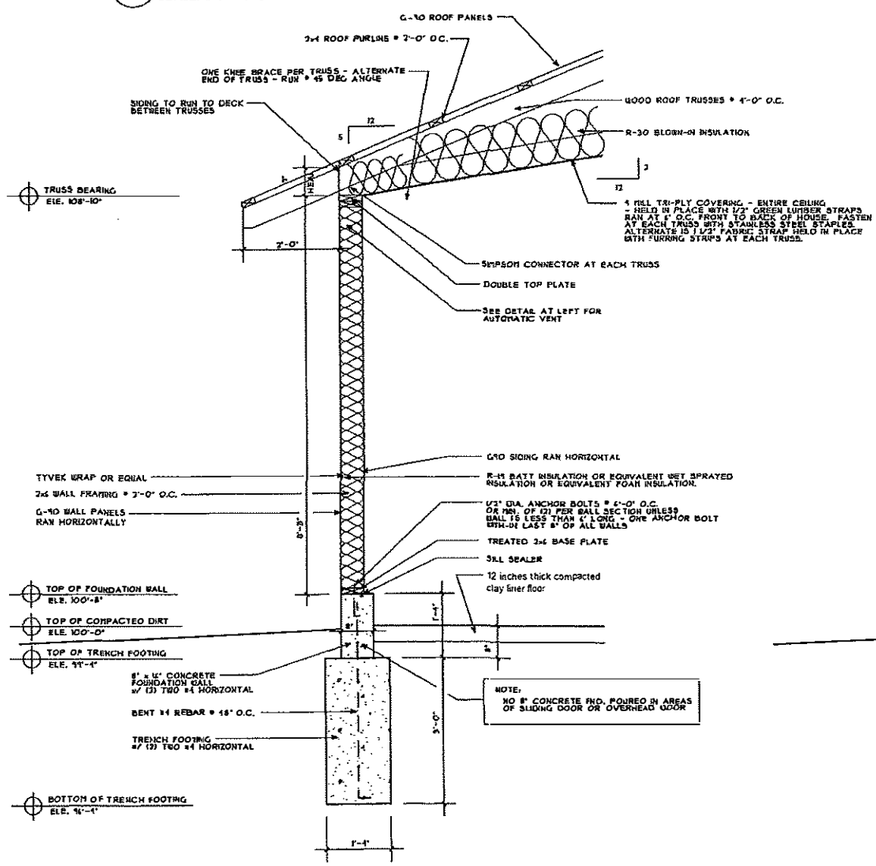

A WALL SECTION "A" - SIDE WALL
SCALE: 3/4" = 1'-0"

ROOF TRUSS NOTES:

1. ALL ROOF TRUSSES SHALL BE MANUFACTURED BY A COMPANY EXPERIENCED IN THE MANUFACTURE OF WOOD ROOF TRUSSES.
2. TRUSS DIAGRAMS ARE DIAGRAMMATIC ONLY. ALL TRUSSES SHALL BE DESIGNED BY TRUSS MANUFACTURER TO FIT THE SIZES AND SHAPES INDICATED. ALL DESIGNS SHALL BE IN STRICT COMPLIANCE WITH THE LATEST EDITION OF THE IRC.
3. SHOP DRAWINGS SHALL INDICATE ALL PLACEMENT, BRACING, ANCHORAGE, ALL MEMBER SIZES WITH COMPLETE DESIGN CALCULATIONS, AND SHALL BE SUBMITTED IN TRIPLICATE TO ARCHITECTURAL DESIGNS INC. FOR APPROVAL. FOLLOWING REVIEW BY THE CONTRACTOR AND PRIOR TO ANY FABRICATION. DRAWINGS AND CALCULATIONS SHALLBE PREPARED UNDER THE SUPERVISION OF AN ENGINEER REGISTERED IN THE STATE OF INDIANA, AND SHALL BEAR HIS SEAL.
4. THE INSTALLATION OF ANY DAMAGED ROOF TRUSSES SHALL BE PROHIBITED.
5. TRUSSES SHALL BE INSTALLED IN COMPLIANCE WITH THE APPROVED DRAWINGS, APPROVED SHOP DRAWINGS AND INSTALLATION INSTRUCTIONS. TEMPORARY CONSTRUCTION LOADS GREATER THAN THE DESIGN LOADS ARE PROHIBITED. TEMPORARY BRACING SHALL BE PROVIDED UNTIL SHEATHING IS APPLIED.
6. CONTRACTOR SHALL MEET WITH THE ROOF TRUSS MANUFACTURER OR HIS ENGINEER PRIOR TO ERECTION FOR THE PROPER INSTRUCTION ON HANDLING AND INSTALLING OF ALL ROOF TRUSSES TO BE USED IN THIS PROJECT.

TRUSS LOADING	
TOP CHORD LIVE LOAD	25
TOP CHORD DEAD LOAD	15
BOTTOM CHORD LIVE LOAD	
BOTTOM CHORD DEAD LOAD	
TOTAL LOAD	40

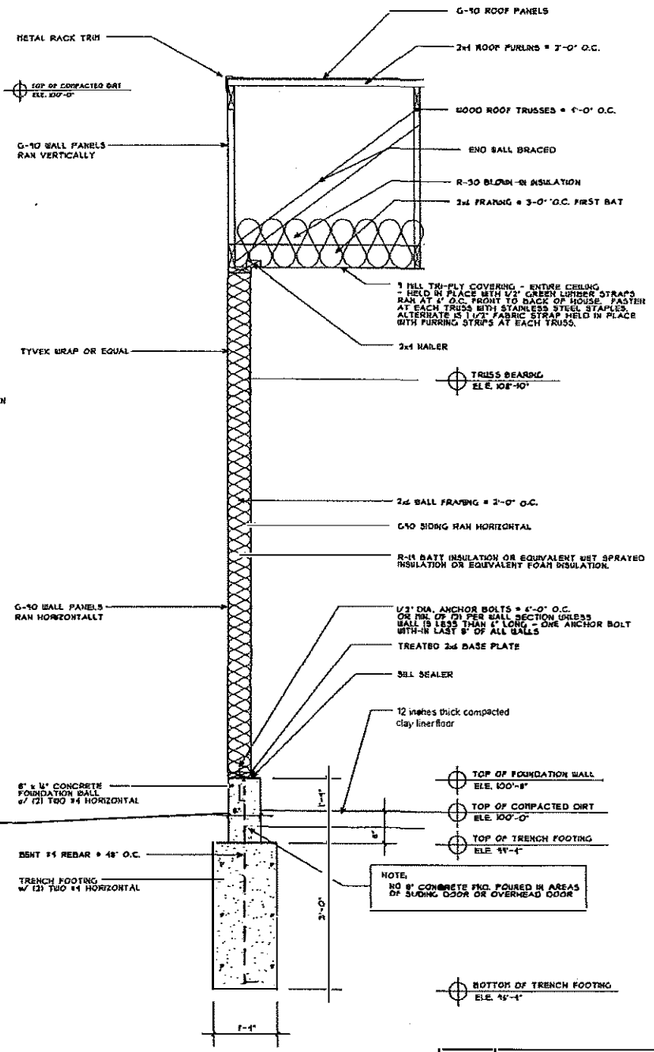

B WALL SECTION "B" - END WALL
SCALE: 3/4" = 1'-0"

DATE	REVISION/ISSUE
12/10/10	REVISED PER MARK/AJ

RECEIVED
JUL 28 2017
DEPARTMENT OF ENVIRONMENTAL M NAGEMENT
OFFICE OF LAND QUALITY

GENERAL NOTES

- ALTHOUGH DRAWINGS ARE DRAWN TO SCALE, THE ACCURACY OF THE DRAWING CANNOT BE GUARANTEED DUE TO DISCREPANCIES IN THE METHODS OF REPRODUCTION. DIMENSIONS SHOULD BE DERIVED FROM DIMENSIONED PLANS.
- ALL DIMENSIONS, ROUGH OPENING SIZES, AND ELEVATION MARKERS MUST BE FIELD VERIFIED BY THE GENERAL CONTRACTOR. MAUST ARCHITECTURAL SERVICES SHALL NOT BE HELD RESPONSIBLE FOR ANY DIMENSIONAL DISCREPANCIES WHICH HAVE NOT BEEN BROUGHT TO THEIR ATTENTION PRIOR TO CONSTRUCTION.

MAUST ARCHITECTURAL SERVICES
DIVISION OF L.E.M., INC.
112 NORTH MAIN STREET
GOSHEN, INDIANA 46526
* Architects
* Planners
* Consultants
* Construction Mgmt.
* Rule 5 and MS4 Filing
PHONE (574) 537-8500
FAX (574) 537-0808

These drawings are the property of Maust Architectural Services and may not be reprinted, copied or reused in any manner without the expressed written consent of Maust Architectural Services.

MILLER POULTRY PROTOTYPE

60' x 600'

NON-CURTAIN SIDED BROILER BARN

BUILDING SECTIONS

DRAWN :	CHECKED :
DATE : 1/31/2011	
SCALE : AS NOTED	

DESIGN NOTES

1. This drawing set is to be used in conjunction with Indiana Conservation Practice Standard 313.
2. All wood members are based on Southern Yellow Pine (SYP) No. 2 unless otherwise specified.
3. Designed in conformance with ASCE 7-05, using "C" Exposure and Occupancy Category 1.
4. Minimum Allowable Soil Bearing Strength = 2000 psf.
5. Designer should determine post type and size that will control the Y-Brace member size.
   Post Option 1 is a 6"x 6" Southern Yellow Pine(SYP) No.1
   Post Option 2 is a 3-ply 2"x 6" GluLam or NailLam with an allowable flexural bending stress ≥ 1600 psi.
6. Side Openings are allowed. If client needs openings greater than 8'-0" then it cannot be within 8 ft. (one normal bay) from end walls. Also openings over 8'-0" require doubling of the header, additional braces and posts. Side Openings from 8' to 16' will require doubling of the posts in Note 5. If opening required will not exceed 12', a single 8"x 8" SYP No. 1 is allowable. See details within this drawing set.
7. Backfill against wall is optional, refer to details shown on page 7.
8. In general, a post length of 10 feet with 2"x 10" girders will provide a clear height of 14'-11". If using 2"x 10" girder post stub length is 14", and 16" for 2" x 12" girders. This roof design does not require Hurricane Straps if fastened as shown in detail A on page 6, but it is recommended that they be used.
9. All Bearing Blocks shall be a minimum of 14" long.
10. Single Y-Brace members shall be 51" long; Double Y-Brace members shall be 51" and 49-1/2".
11. Knee Brace members shall be 8'-9 1/2"long; Double Knee Brace members shall be 7'-11" long FOR a 3:12 pitch, 40' truss span, and 6" x 8" post. At Double Knee Brace location the bearing block of the Y-Brace shall be a 2"x 8": for a 6"x 6" post; and 2"x 10" for a 6"x 8" or 8"x 8" post.
12. Truss members may vary depending on span and material required. The above notes 8 and 11 disclosing clear height, post stub length, and knee brace lengths, are based on a truss constructed with 2" x 4" members.
13. BUILDER is responsible for accurate member lengths.
14. Concrete end wall is permitted. Refer to side wall design on page 7.

CONSTRUCTION NOTES

1. All posts, Y braces and bearing blocks shall be as specified, 0.6 pounds per cubic foot (pcf), pressure preservative treatment (ppt).
2. If Chromated Copper Arsenate (CCA) ppt is used, then all fasteners shall be galvanized.
3. If Alkaline Copper Quaternary (ACQ) ppt is used, then all fasteners shall be hot dipped galvanized or stainless steel.

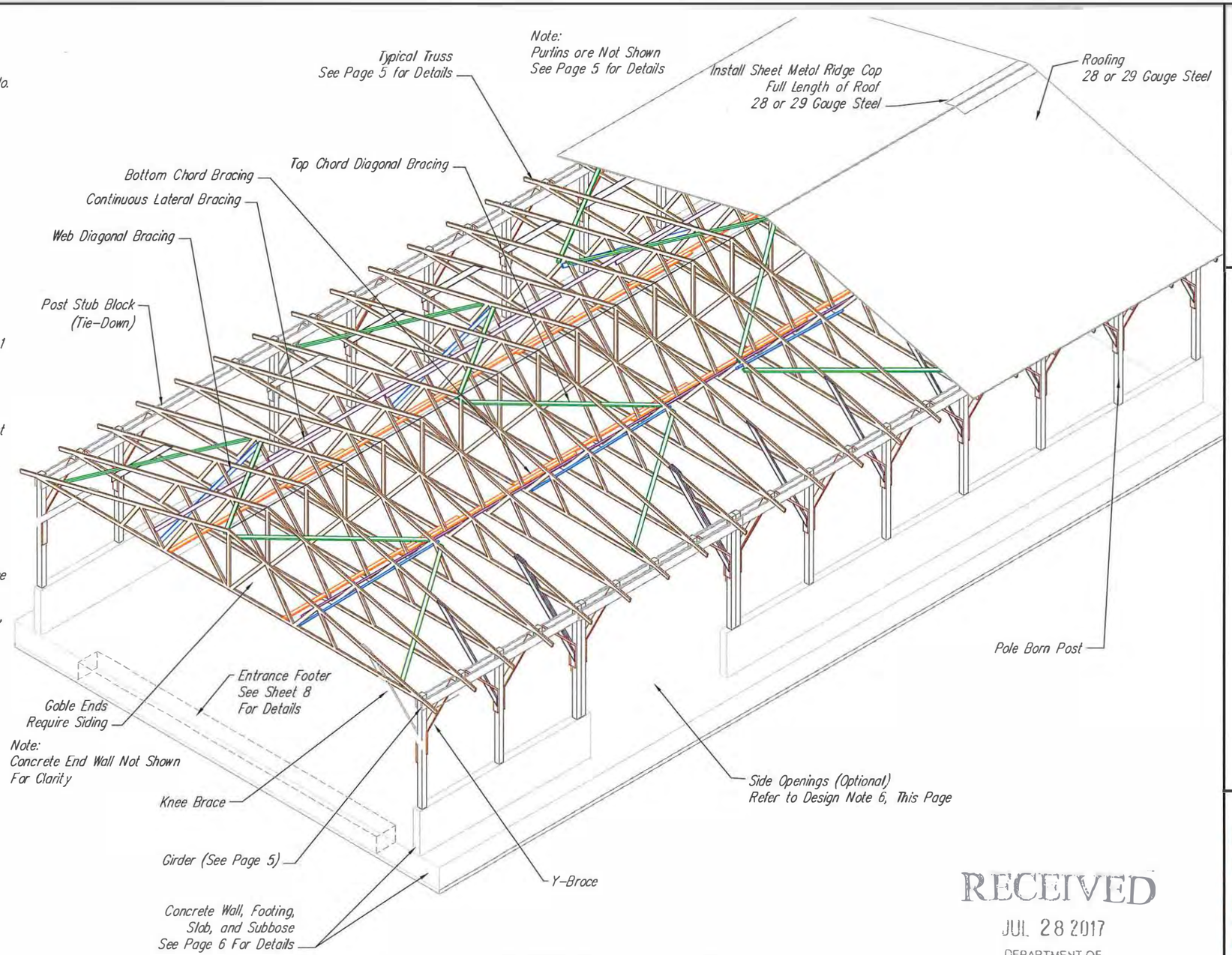

TYPICAL POLE BARN

Maximum Truss Span is 40'-0"
NOT TO SCALE

RECEIVED
JUL 28 2017
DEPARTMENT OF
ENVIRONMENTAL MANAGEMENT
OFFICE OF LAND QUALITY

Designed	William J. Zacharias 12/06
Drawn	Jason McKittrick 01/08
Checked	
Approved	

Producer

County County, Indiana

Roof Design With Concrete Wall For Spans 33' to 40'

NRCS Natural Resources Conservation Service United States Department of Agriculture

File No.

Drawing No. Adapted From
OH-N-537-CAD
4/21/16 8:35 AM
Sheet 4 of XX

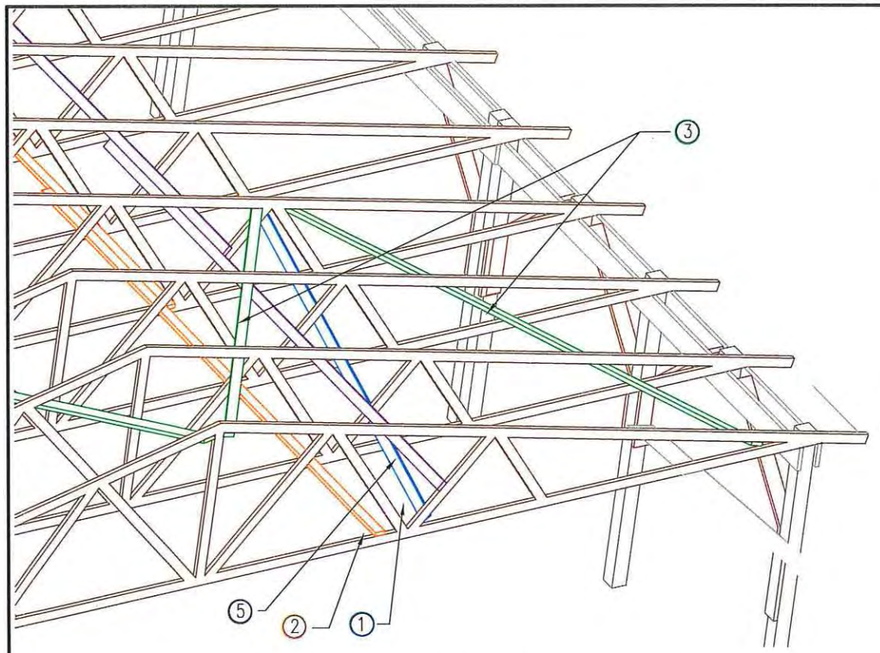

TYPICAL TRUSS LATERAL AND WEB DETAIL

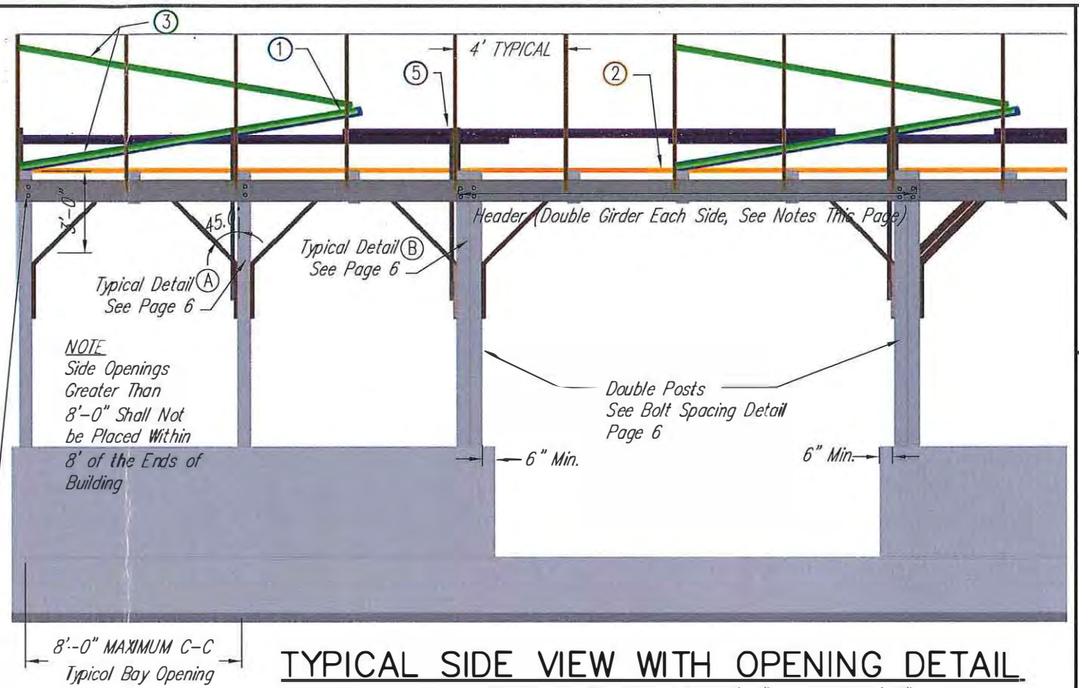

TYPICAL SIDE VIEW WITH OPENING DETAIL

Showing Opening Greater Thon 8'-0" Less Thon 16'-0"

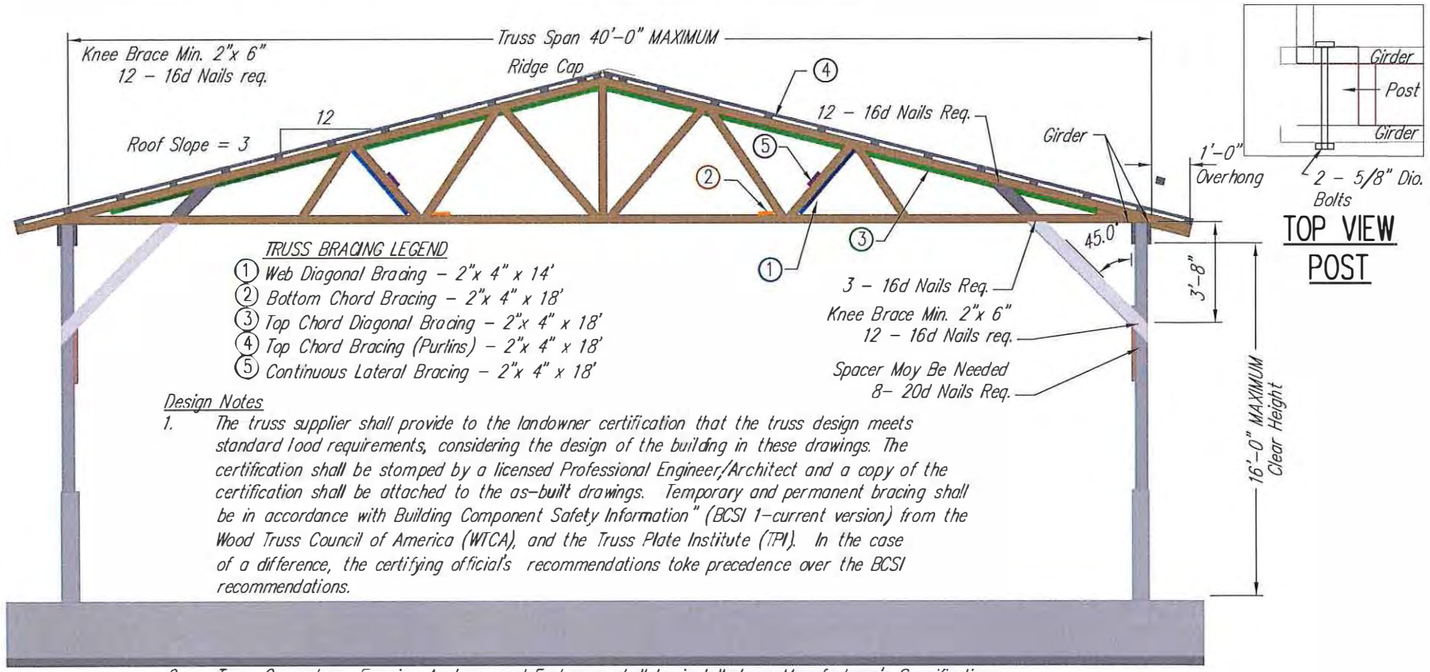

TRUSS BRACING LEGEND

1. Web Diagonal Bracing - 2"x 4" x 14'
2. Bottom Chord Bracing - 2"x 4" x 18'
3. Top Chord Diagonal Bracing - 2"x 4" x 18'
4. Top Chord Bracing (Purlins) - 2"x 4" x 18'
5. Continuous Lateral Bracing - 2"x 4" x 18'

Design Notes

1. The truss supplier shall provide to the landowner certification that the truss design meets standard lood requirements, considering the design of the building in these drawings. The certification shall be stomped by a licensed Professional Engineer/Architect and a copy of the certification shall be attached to the as-built drawings. Temporary and permanent bracing shall be in accordance with Building Component Safety Information" (BCSI 1-current version) from the Wood Truss Council of America (WTCA), and the Truss Plate Institute (TPI). In the case of a difference, the certifying official's recommendations toke precedence over the BCSI recommendations.
2. Truss Connectors, Framing Anchors, and Fasteners shall be installed per Manufacturer's Specifications.
3. Metal roof shall be ottached with 1-1/4" long grommeted screws to each row of purlins at a spacing of no more thon 8" at edges and overlaps and no more than 24" in sheet centers.

TYPICAL END VIEW DETAIL

NOT TO SCALE

TOP VIEW POST

RECEIVED
JUL 28 2017
DEPARTMENT OF ENVIRONMENTAL MANAGEMENT
OFFICE OF LAND QUALITY

DESIGN NOTES FOR OPENINGS (BAY)

1. Girders will be No. 1 SYP for all boys (FOR INDIANA). Girders will require the use of 2 - 2" x 10" in all IN counties except for LAPORTE and ST. JOSEPH COUNTIES. These counties will require 2 - 2" x 12".
2. Boy openings ranging from 8 ft. to 12 ft will require 2 additional 2" x 10" for a total of 4 members (2 on eoch side of post) except for LAPORTE and ST. JOSEPH COUNTIES. These counties will require 2 odditional 2" x 12".
3. Bay openings ranging from 12 ft to 16 ft will require 4 - 2" x 12" (2 on each side of post) for all IN counties.

DESIGN NOTES FOR PERMANENT TRUSS BRACING 2"x 4" MEMBERS

1. Web diagonal bracing shall be placed no greater than 13 ft. along truss span ond at 20 ft. intervals along the length of the building. Web diagonal bracing shall connect 4 trusses.
2. Bottom chord bracing shall be placed at 10 ft. but not greater than 15 ft. along truss span. Members must lop one truss span.
3. Top chord diagonal bracing shall be placed on the bottom of the top truss member at approx. 45 degrees and connect 4 trusses. For o 40 ft. span; 4 will be required along truss span and at 16 to 20 ft. intervals along the length of the building.
4. Top chord bracing (purlins) shall be placed on 2'-0" C-C. Install an additionol row of purlins near ridge of roof for ridge cap to connect securely.
5. Continuous lateral bracing shall be at the locations where web diagonal bracing is required.
6. Nail all members to trusses with 2 nails. Nails shall be either 10d, 12d, or 16d.
7. All bottom chord and continuous loterol members shall overlap one truss span.

Designed William J. Zacharias 12/06
Drawn Jason McKittrick 01/08
Checked
Approved

Producer

Roof Design With Concrete Wall For Spans 33' to 40'

County County, Indiana

NRCS Natural Resources Conservation Service United States Department of Agriculture

File No.

Drawing No. Adapted From OH-N-537-CAD

4/21/16 8:35 AM

Sheet 5 of XX

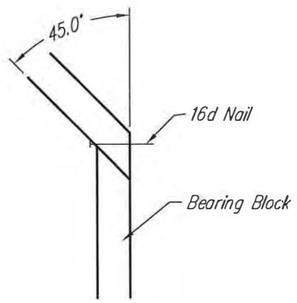

TYPICAL Y-BRACE MITER DETAIL
Not to Scale

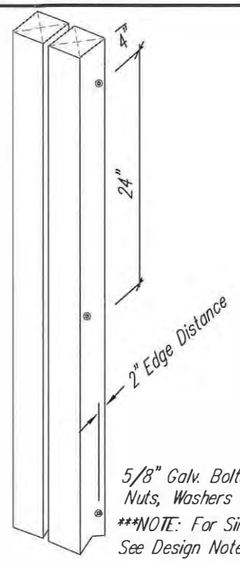

5/8" Galv. Bolts,
Nuts, Washers
***NOTE: For Single Post Option
See Design Note 5 on Page 4

BOLT SPACING DETAILS-Double Posts
Not to Scale

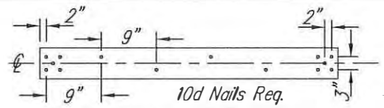

Double Y-Brace Nail Pattern
Not to Scale

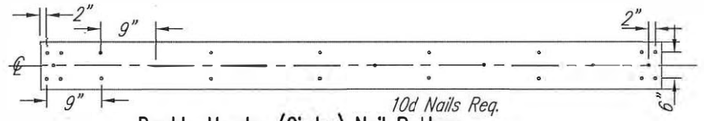

Double Header (Girder) Nail Pattern
Not to Scale

*NOTE: 5/8" BOLTS MAY BE GALV. THREADED ROD

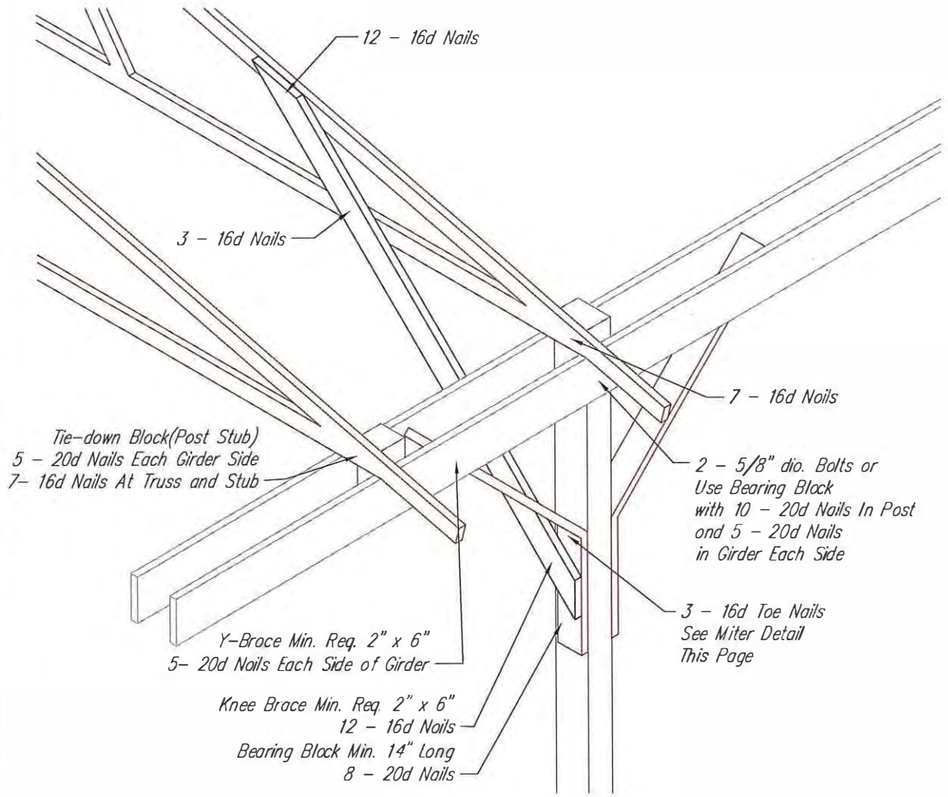

TYPICAL POST-TRUSS
BRACING/CONNECTION DETAIL (A)
Not to Scale

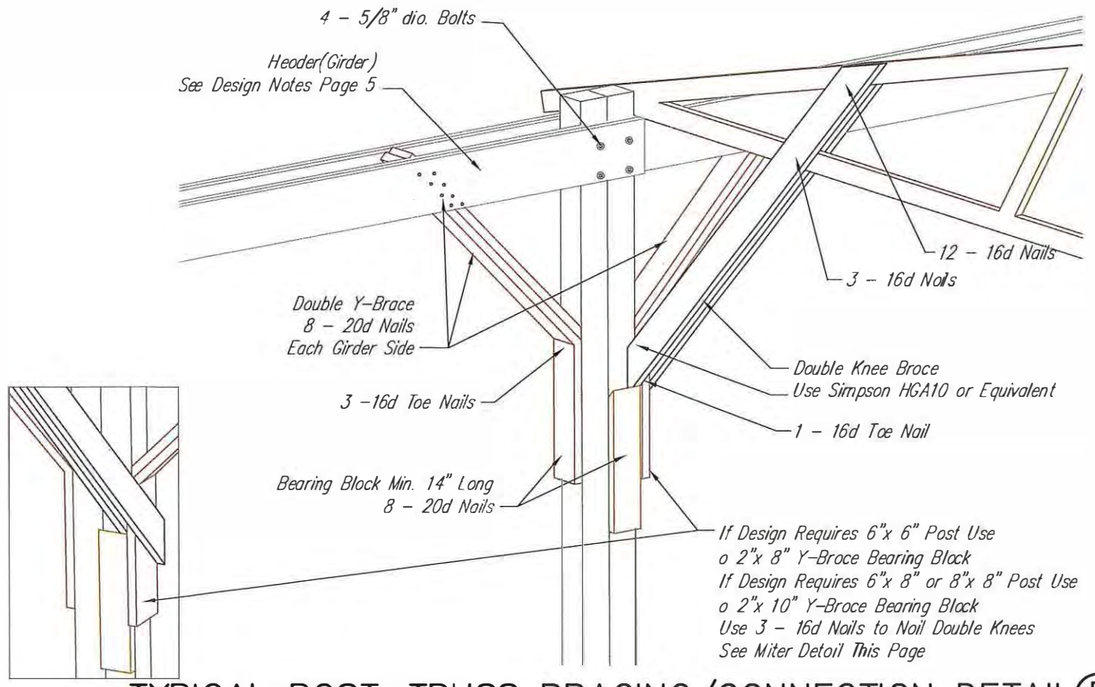

TYPICAL POST-TRUSS BRACING/CONNECTION DETAIL (B)
SIDE OPENINGS GREATER THAN 8 FT. WIDE
Not to Scale

RECEIVED
JUL 28 2017
DEPARTMENT OF
ENVIRONMENTAL MANAGEMENT
OFFICE OF LAND QUALITY

Designed	William J. Zacharias	12/06
Drawn	Jason McKittrick	01/08
Checked		
Approved		

Producer

Roof Design With Concrete Wall For Spans 33' to 40'

County County, Indiana

NRCS
Natural Resources Conservation Service
United States Department of Agriculture

File No.

Drawing No. Adapted From
OH-N-537-CAD
4/21/16 8:35 AM
Sheet 6 of XX

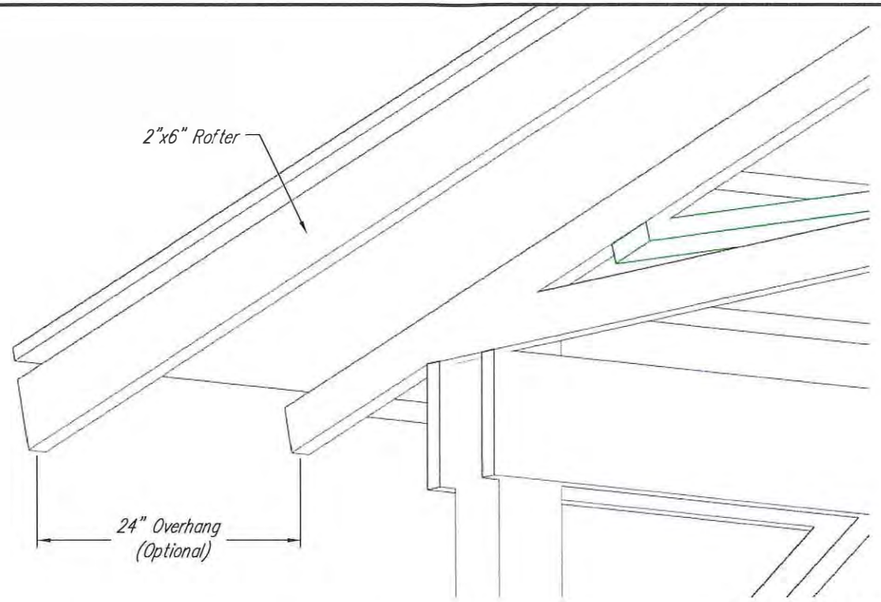

TYPICAL DETAIL FOR GABLE OVERHANG (OPTIONAL)

NOT TO SCALE

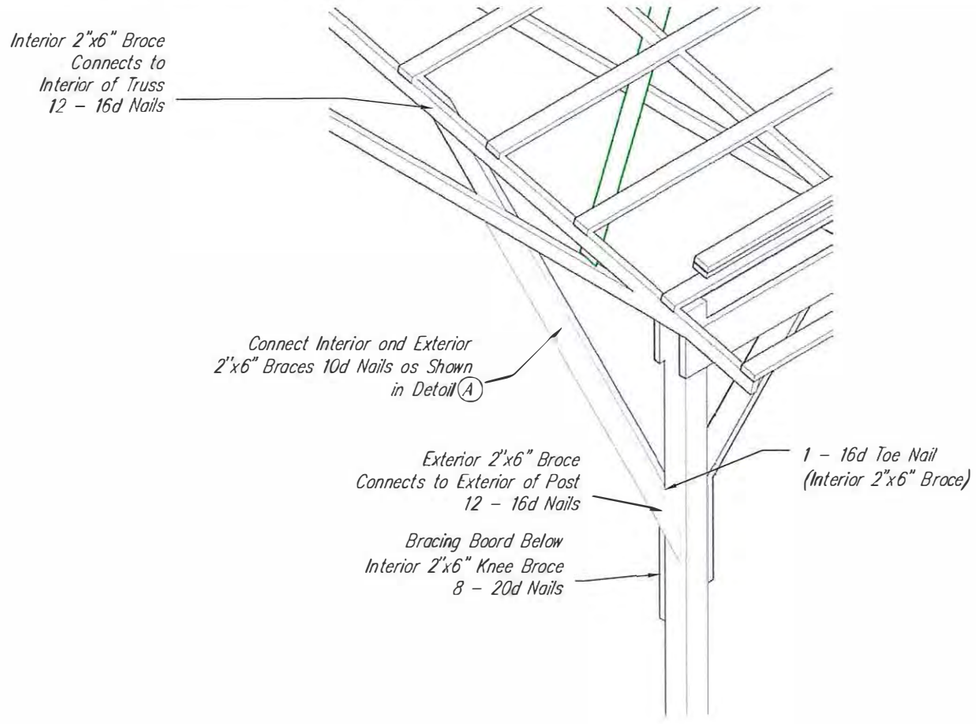

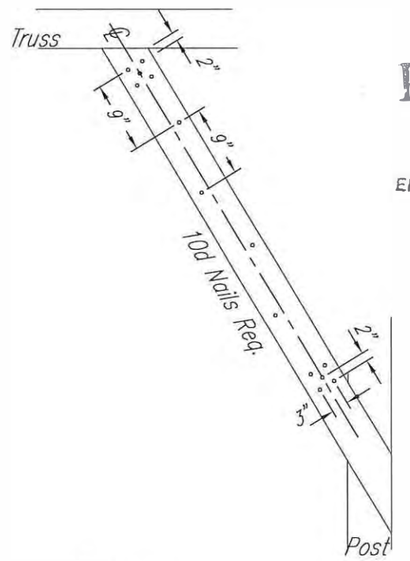

(A) Double Brace Nail Pattern

Not to Scale

DETAIL FOR GABLE END KNEE BRACE

NOT TO SCALE

RECEIVED
JUL 28 2017
DEPARTMENT OF
ENVIRONMENTAL MANAGEMENT
OFFICE OF LAND QUALITY

Designed Jason McKittrick 01/08
Revised Duane Riethman 02/16
Checked
Approved

Producer

Roof Design With Concrete Wall For Spans 33' to 40'

County County, Indiana

NRCS Natural Resources Conservation Service
United States Department of Agriculture

File No.

Drawing No.

4/21/16 8:35 AM
Sheet 7 of XX

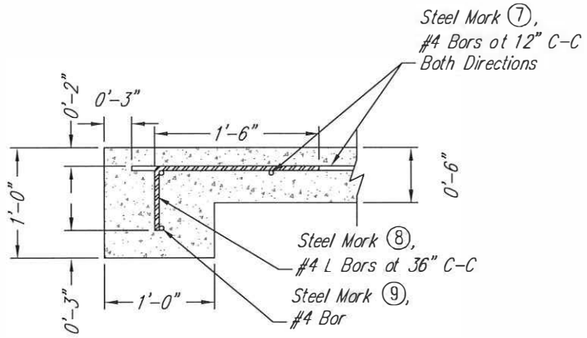

CROSS SECTION OF ENTRANCE FOOTER

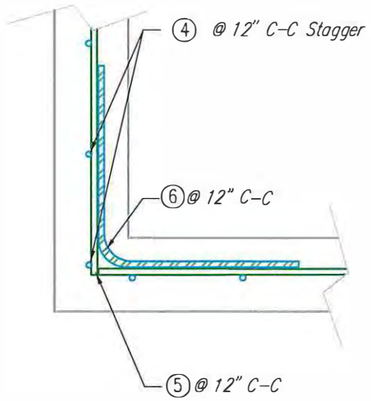

WALL CORNER DETAIL

Optional

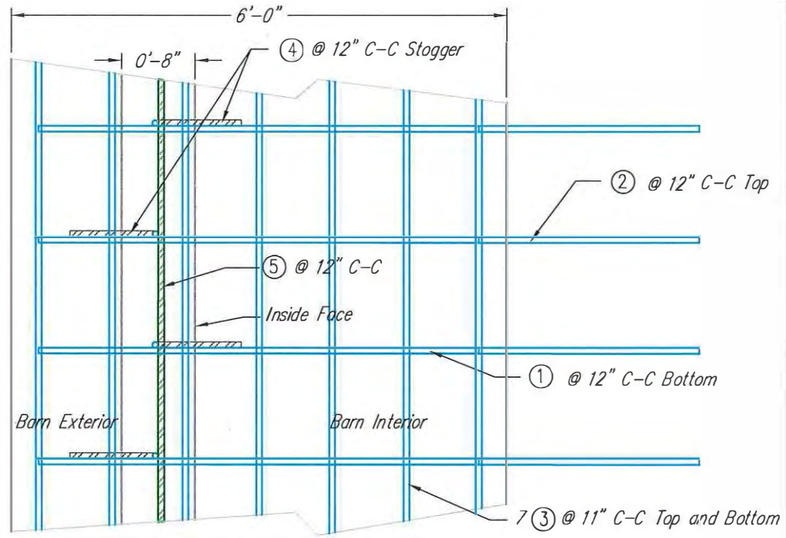

STEEL DETAILS PLAN

NOTES

1. *Topography and soil conditions may require tile drains with drainfill.*
2. *Backfill is optional above top of footer. However, if backfill is used, provide drainfill as shown and positive drainage away from wall.*
3. *2000 PSF minimum soil bearing capacity.*
4. *Reinforcing steel for footing and walls shall have a tension yield strength of fy = 60,000 psi. (Grade 60)*
5. *Concrete shall have a minimum 28 day compressive strength of 4000 psi.*
6. *If design of wall requires corners then Steel Mark ⑤ shall be placed in-line with Steel Mark ⑥.*
7. *Locate posts' connection anchors prior to pouring concrete. Adjust rebar as needed, maintain 2" min. concrete cover.*
8. *Control Joints are required at 120 ft. intervals. Refer to Control joint details.*
9. *Wall design has 100 psf horizontal surcharge loading.*
10. *It is recommended that the top of the wall be chamfered ($\frac{3}{4}$").*

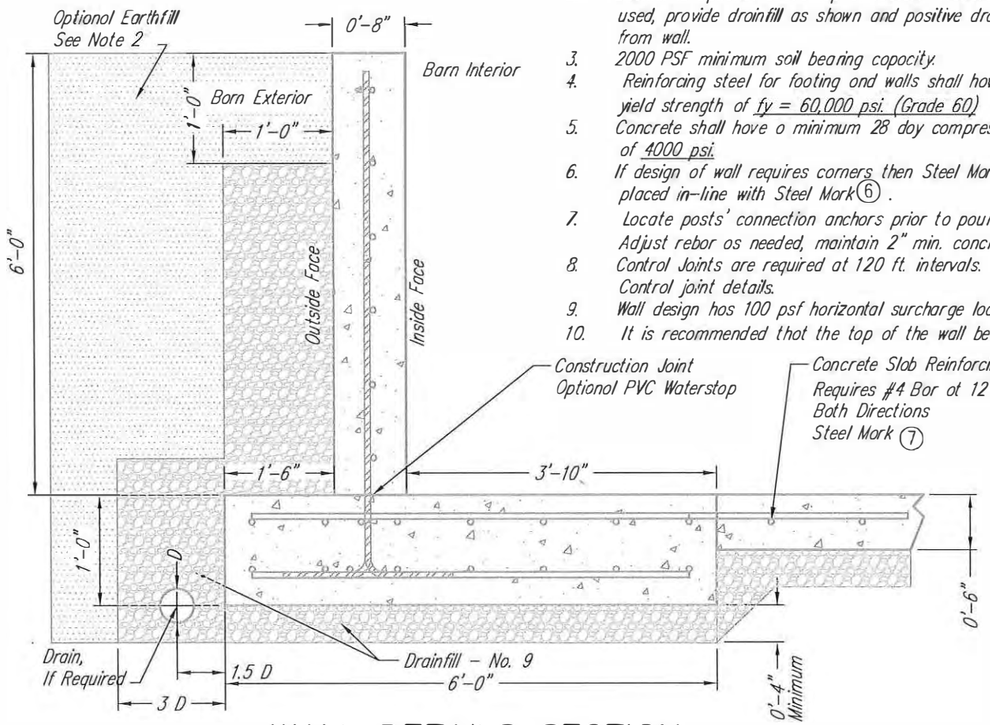

WALL DETAILS SECTION

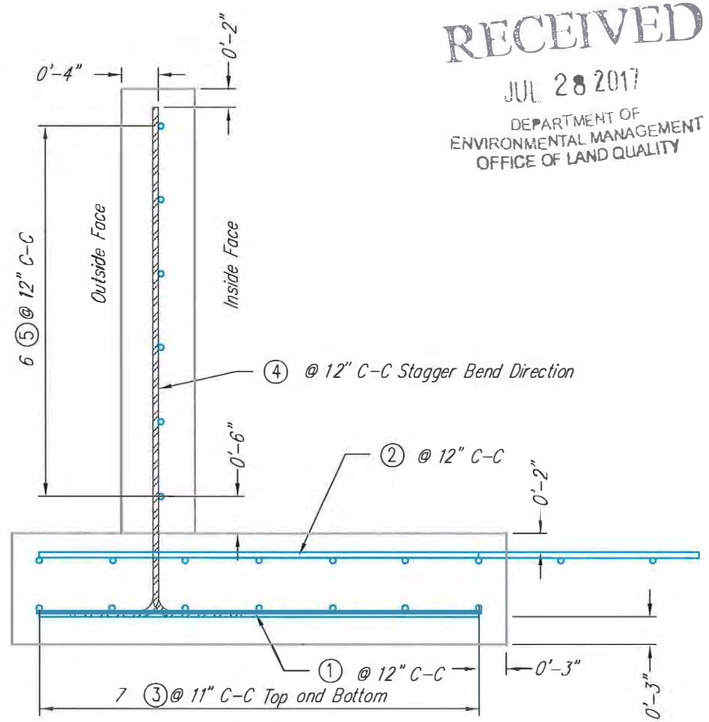

STEEL DETAILS SECTION

RECEIVED
JUL 28 2017
DEPARTMENT OF
ENVIRONMENTAL MANAGEMENT
OFFICE OF LAND QUALITY

Date
Designed William J. Zacharias 12/06
Drawn Duane Riethman 02/16
Checked
Approved

Producer

6.0 FOOT CONCRETE WALL DESIGNED TO SUPPORT POLE BUILDINGS 33' TO 40' SPAN

County County, Indiana

NRCS
Natural Resources Conservation Service
United States Department of Agriculture

File No.

Drawing No. *Adapted From* OH-N-552-CAD

4/21/16 8:35 AM

Sheet 8 of XX

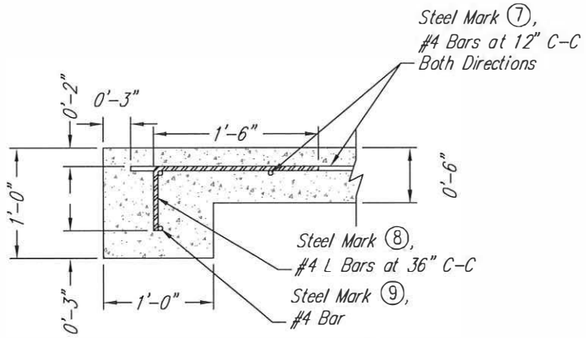

CROSS SECTION OF ENTRANCE FOOTER

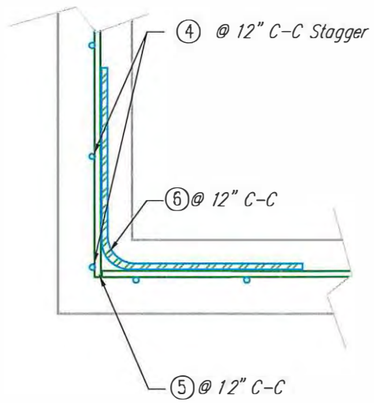

WALL CORNER DETAIL

Optional

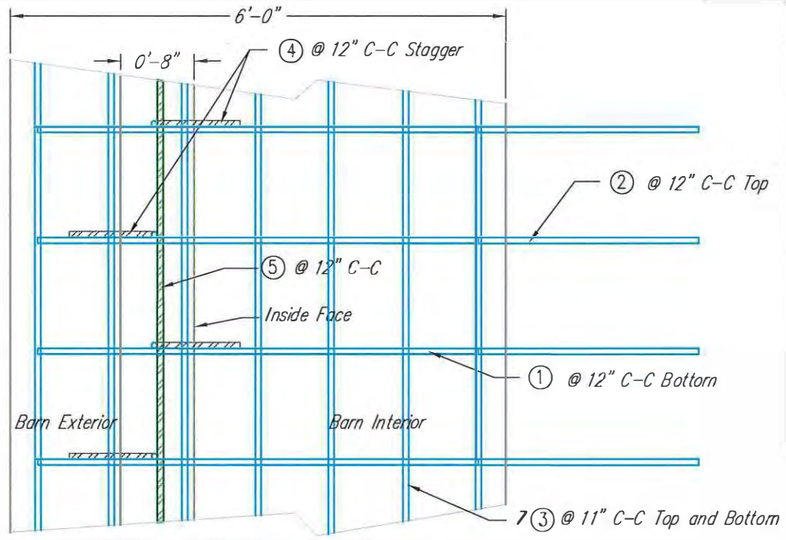

STEEL DETAILS PLAN

NOTES

1. 2000 PSF minimum soil bearing capacity.
2. Reinforcing steel for footing and walls shall have a tension yield strength of fy = 60,000 psi. (Grade 60)
3. Concrete shall have a minimum 28 day compressive strength of 4000 psi.
4. If design of wall requires corners then Steel Mark ⑥ shall be placed in-line with Steel Mark ⑤.
5. Locate posts' connection anchors prior to pouring concrete. Adjust rebar as needed, maintain 2" min. concrete cover.
6. Control Joints are required at 120 ft. intervals. Refer to Control Joint details.
7. Wall design has 100 psf horizontal surcharge loading.
8. It is recommended that the top of the wall be chamfered ($\frac{3}{4}$").

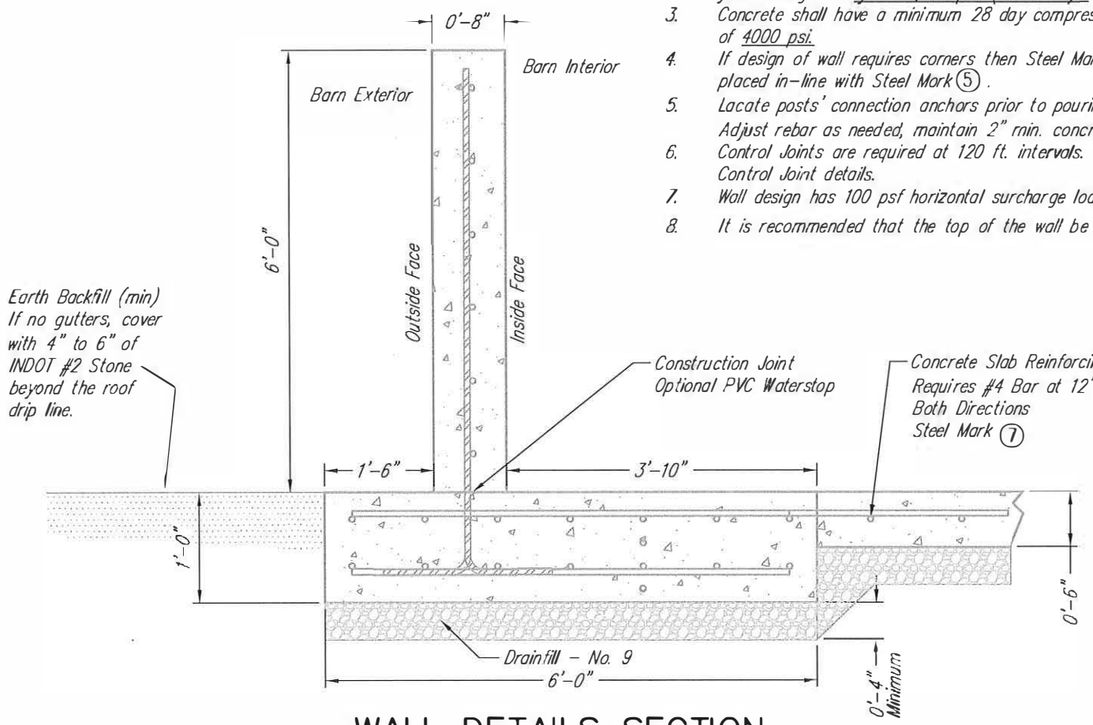

WALL DETAILS SECTION

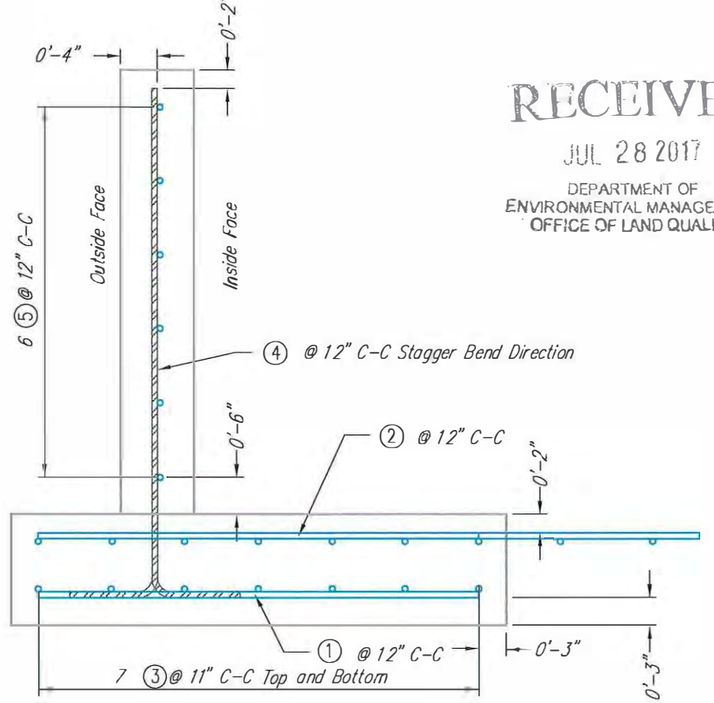

STEEL DETAILS SECTION

RECEIVED
JUL 28 2017
DEPARTMENT OF
ENVIRONMENTAL MANAGEMENT
OFFICE OF LAND QUALITY

Producer

6.0 FOOT CONCRETE WALL DESIGNED TO SUPPORT POLE BUILDINGS 33' TO 40' SPAN

County County, Indiana

	Designed	Drawn	Checked	Approved
	William J. Zacharias	Duane Riethman		
Date	12/06	02/16		

NRCS
Natural Resources Conservation Service
United States Department of Agriculture

File No.

Drawing No. *Adapted From* OH-N-552-CAD
4/21/16 8:35 AM
Sheet 8 of XX

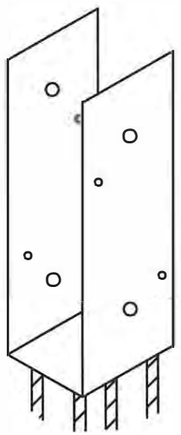

Min. of 800 LBS Uplift and Lateral Resistance Required Sturdi-Wall Plus SWP66 or Equivalent for 6" x 6" Post. If Using Other Post Size, Match Connector to Post.

Double Posts Will Require The Use of 2 Single Post Connectors Side by Side. Ensure That Fasteners will be Installed Correctly.

Use of an alternative post anchor type must be preapproved by the the Engineer.

STEEL SCHEDULE

Location	Mark	Size	Quan	Length	Type	A	B	Total (ft.)
Footing	1	#4	182	5'-6"	1			1001.0
Footing	2	#4	182	7'-2"	1			1304.3
Footing	3	#4	28	81'-0"	1			2268.0
Rear Footing	3	#4	14	42'-6"	1			595.0
Footing/Wall	4	#5	199	7'-4"	2	0'-9"	6'-7"	1459.3
Wall	5	#4	12	79'-6"	1			954.0
Rear Wall	5	#4	6	39'-4"	1			236.0
Wall/Corner	6	#4	12	3'-4"	2	1'-8"	1'-8"	40.0
Slab - (Width)	7	#4	76	30'-8"	1			2330.7
Slab - (Length)	7	#4	31	75'-2"	1			2330.2
Entrance Footing	8	#4	11	2'-1"	2	0'-7"	1'-6"	22.9
Entrance Footing	9	#4	1	42'-6"	1			42.5

Building Width :	40 ft.	*Concrete Volume - Footer & Floor :*	88 cu. yd.	Total - #4 bars :	11124.6
Building Length :	80 ft.	*Concrete Volume - Walls :*	30 cu. yd.	Total - #5 bars :	1459.3

TYPICAL WALL MOUNT SINGLE POST

NOT TO SCALE

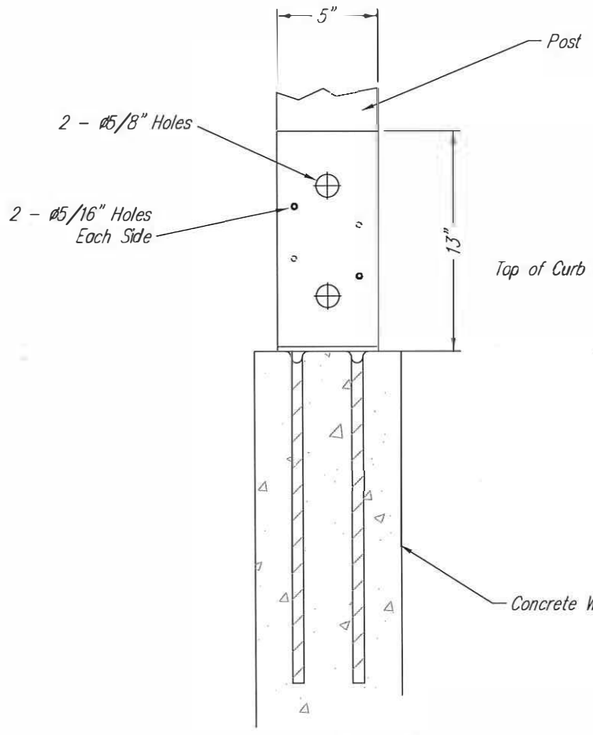

Cross Section

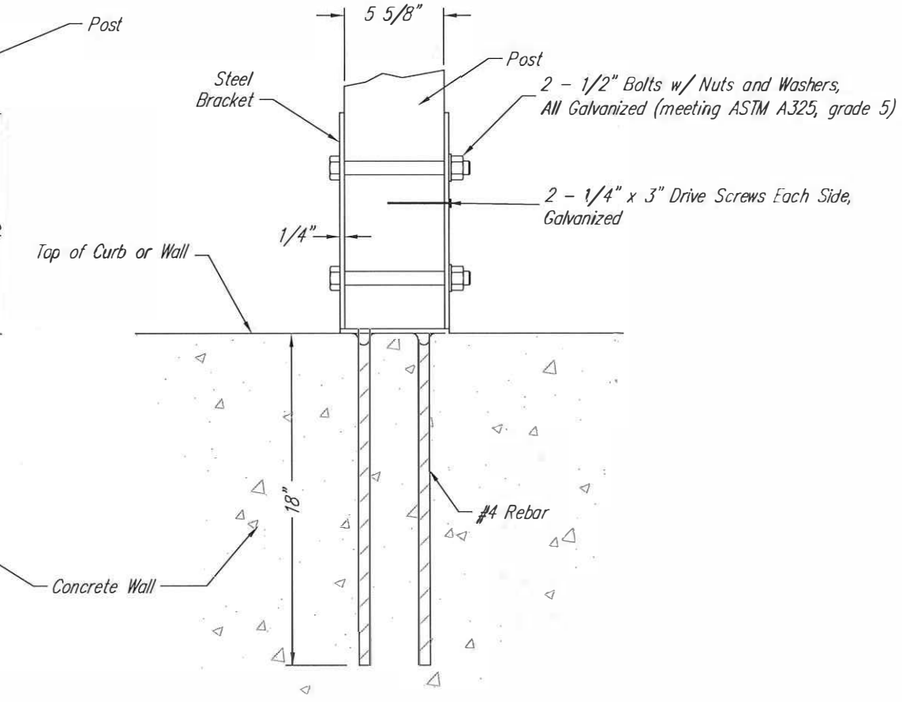

Side View

NOTES:

1. *Nuts must be kept snug throughout the life of the structure or serious damage could result.*
2. *If ACQ treated posts are used, install a barrier membrane between bracket and wood post to prevent corrosion.*

POST BASE DETAIL

NOT TO SCALE

Straight

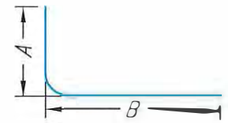

TYPE-1 TYPE-2

MINIMUM STEEL BAR LAP REQUIREMENTS

#4 bar = 1'- 4" lap
#5 bar = 1'- 8" lap
#6 bar = 2'- 0" lap

*** Splice lengths not included in totals.*

NOTE: All bends not otherwise specified shall conform to the proposed standard A.C.I. code recommended sizes. All dimensions are measured from outside to outside of bar, except where otherwise specified. It shall be the responsibility of the fabricator to assign a code number to bars for each structure and parts thereof.

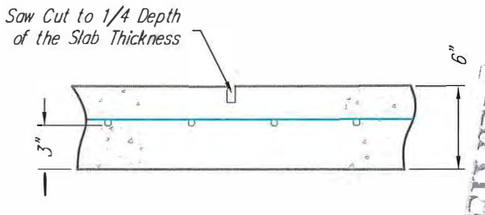

CONTROL JOINT

NOT TO SCALE

RECEIVED
JUL 28 2017
DEPARTMENT OF ENVIRONMENTAL MANAGEMENT
OFFICE OF LAND QUALITY

DESIGN NOTES FOR THE CONCRETE FLOOR

1. *Concrete minimum design strength shall be 4000 psi.*
2. *Curing compound in accordance with construction specification for Concrete may be used to preserve moisture and and accomodate proper hydration and curing.*
3. *Floor Control joints shall be 1 1/2" deep x 1/8" wide. If desired, landowner and/or contractor may cut joints at 30' spacing the entire length and width of the structure.*
4. *Wall Control Joints are required at 120 ft. intervals maximum.*

Designed Jason McKittrick 01/08
Revised Duane Riethman 02/16
Checked
Approved

Producer

POST ANCHOR DETAILS & 6' WALL STEEL SCHEDULE

County County, Indiana

NRCS Natural Resources Conservation Service
United States Department of Agriculture

File No.

Drawing No.

4/21/16 8:35 AM
Sheet 9 of XX

NATURAL RESOURCES CONSERVATION SERVICE
CONSTRUCTION SPECIFICATION

CONCRETE CONSTRUCTION

1. SCOPE

This specification covers concrete construction for reinforced structures, plain concrete for waste storage pond liners, and other slabs.

2. PREPARATION OF FORMS AND SUBGRADE

Unless otherwise indicated on the construction drawings, concrete shall be placed on a smoothly graded soil or sand subgrade compacted, as necessary, to a uniform density throughout. Plain concrete, where vehicle traffic is expected, shall be placed on a minimum 3 inches of gravel. Over-excavation shall be corrected by a procedure approved by the NRCS Engineer or the designated representative.

Concrete shall not be placed until the subgrade, forms and steel reinforcement have been inspected and approved by the NRCS Engineer or the designated representative. The Engineer shall be notified far enough in advance to provide time for the inspection.

Prior to placement of concrete, the forms and subgrade shall be free of chips, sawdust, debris, standing water, ice, snow, extraneous oil, mortar or other harmful substances or coatings.

Surfaces against which concrete is to be placed shall be firm and damp. Placement of concrete on plastic, mud, dried earth, or uncompacted fill or frozen subgrade will not be permitted.

3. FORMS

Forms shall be of wood, plywood, steel or other approved material and shall be mortar tight. The forms and associated falsework shall be substantial and unyielding and shall be constructed so that the finished concrete will conform to the specified dimensions and contours.

Items to be embedded in the concrete shall be positioned accurately and anchored firmly.

Tolerance on formed concrete is + 3/8 inch. Tolerance on concrete formed in earth is – 1 inch to +6 inches.

4. CONCRETE MIX

Portland cement shall be Type I, IA, II or IIA (Type I with an added air entrainment admixture is preferred). If Type IA or IIA cement is used, additional air entrainment admixture shall be the same type that was used in the cement. Cement that is partially hydrated (hardened), or otherwise damaged, shall not be used. Air entrainment shall be 4 to 7 percent.

Air entraining admixtures shall conform to the requirements of ASTM Specification C 260.

Aggregates shall consist of clean, hard, strong and durable particles that are free of silt, clay or any other material that may affect bonding of the cement paste.

Fine aggregate shall meet the requirements of INDOT fine aggregate number 23. Maximum coarse aggregate size shall be 3/4 inch.

Water shall be clean and free of injurious amounts of oil, salt, acid, alkali, organic matter or other deleterious substances.

RECEIVED
JUL 28 2017
DEPARTMENT OF
ENVIRONMENTAL MANAGEMENT
OFFICE OF LAND QUALITY

Concrete shall have a minimum 28-day compressive strength of 4,000 psi. In lieu of strength tests, a mix containing an acceptable aggregate, 6 bags of cement per cubic yard and no more than 5.5 gallons or 46 pounds of water per bag of cement (including moisture in the aggregate) may be accepted.

RECEIVED
JUL 28 2017
DEPARTMENT OF
ENVIRONMENTAL MANAGEMENT
OFFICE OF LAND QUALITY

The slump of the concrete shall be 3 to 5 inches.

5. MIXING AND PLACING CONCRETE

Concrete shall be uniform and thoroughly mixed when delivered to the job sites.

Concrete shall be discharged into the forms, vibrated and spaded within 90 minutes after the cement has been introduced into the aggregates. When air temperatures are above 85 degrees, this time must be reduced to 45 minutes.

The Inspector may allow a longer time if an approved set retarding admixture is used.

Concrete shall be deposited as close as possible in its final position. It shall not be allowed to drop more than 5 feet in forms and must not be required to flow laterally more than 8 feet.

If concrete must be dropped more than 5 feet, hoppers and chutes, "elephant trunks", etc., shall be used to prevent segregation.

If concrete must be moved laterally more than 8 feet, it shall be moved by shoveling, chutes, conveyors, wheelbarrows or similar equipment. Vibration must not be used to make concrete flow in the forms.

Plasticizing or plasticizing and retarding admixtures used shall conform to ASTM C 494, Types F or G or C 1017 as applicable.

Immediately after placement, concrete shall be consolidated by spading and vibrating, or spading and hand tamping. It shall be worked into corners and angles of the forms and around all reinforcement and embedded items in a manner which prevents segregation or the formation of "honeycomb". Excessive vibration which results in segregation of materials will not be allowed. The vibrator head shall be kept vertical when inserted into the concrete and shall penetrate at least 6" into the previously placed layer.

Slab concrete shall be placed at design thickness in one layer, but walls should be placed in essentially horizontal layers not more than 24 inches high. Successive layers shall be placed and consolidated fast enough to ensure a good bond between layers and to prevent "cold joints".

If the surface of a layer in place will develop its initial set before more concrete is placed on it, a construction joint (of the type shown in the plan) shall be made.

If freshly mixed concrete is to be placed against hardened concrete, the hardened concrete must be clean, sound, fairly level and roughened with some coarse aggregate particles exposed. Any dirt, form oil, wood chips or other foreign material shall be removed.

Concrete surfaces shall be smooth and even. Careful screeding (striking-off) and/or wood or magnesium float finishing are required.

The addition of dry cement or water to the surface of screeded concrete to expedite finishing will not be allowed.

6. REINFORCING STEEL

Reinforcing steel shall be deformed bars manufactured specifically for concrete reinforcement and shall be Grade 60 or higher (more details can be found in ASTM-A-615, A-616 or A-617).

Reinforcing steel shall be free from loose rust, concrete, oil, grease, paint or other deleterious coatings.

Reinforcement shall be accurately placed and secured in position in a manner that will prevent its displacement during the placement of concrete. This shall be accomplished by tying reinforcing steel or special tie bars to the form "snap ties" or by other methods of tying. No welding of either stress steel or temperature and shrinkage steel will be permitted. Reinforcing steel shall not be heated to facilitate bending.

In slabs, steel shall be supported by precast concrete bricks (not clay bricks), corrosion resistant metal chairs or plastic chairs.

The following tolerances will be allowed in the placement of reinforcing bars.

a. Where 1.5 inches clear distance is shown between reinforcing bars and forms, allowable clear distance is 1.125 to 1.5 inches.

b. Where 2 inches clear distance is shown between reinforcing bars and forms, allowable clear distance is 1.625 to 2 inches.

c. Where 3 inches clear distance is shown between reinforcing bars and earth or forms, allowable clear distance is 2.5 to 3 inches. Overexcavation backfilled with concrete shall not count toward clear distance.

d. Maximum variation from indicated reinforcing bar spacing: 1/12th of indicated spacing, but no reduction in amount of bars specified.

Unless otherwise indicated on the drawings, splices of reinforcing bars shall provide a lap of not less than 30 diameters of the smaller bar but not less than 12 inches. Bars will not be spliced by welding. Welded wire fabric shall be lapped at least one mesh width.

The ends of all stress or temperature and shrinkage bars shall be covered with at least 2 inches of concrete.

7. CURING

Concrete shall be prevented from drying for at least 7 days after it is placed. Exposed surfaces shall be kept continuously moist during this period by covering with moistened canvas, burlap, straw, sand or other approved material, unless they are sprayed with a curing compound or covered with a 4 mil or thicker polyethylene. Forms left in place during the curing period shall be kept wet.

Concrete, except at construction joints, may be coated with a curing compound in lieu of continued application of moisture. The compound shall be sprayed on moist concrete surfaces as soon as free water has disappeared, but shall not be applied to any surface until patching, repairs and finishing of that surface are completed.

Curing compound shall be applied in a uniform layer over all surfaces requiring protection at a rate of not less than 1 gallon per 150 square feet of surface or to manufacturer's recommendation, whichever is greater.

RECEIVED
JUL 28 2015
DEPARTMENT OF
ENVIRONMENTAL MANAGEMENT
OFFICE OF LAND QUALITY

8. FORM REMOVAL AND CONCRETE REPAIR

Forms for structure walls shall not be removed until 24 hours or more after concrete placement. When forms are removed in less than 7 days, the concrete shall be sprayed with a curing compound or be kept wet continuously by methods allowed in Section 7 of this specification.

Forms shall be removed in such a way as to prevent damage to the concrete. Forms shall be removed before walls are backfilled.

Where minor areas of the concrete surface are "honeycombed", damaged or otherwise defective, it shall be removed, the area wetted and then filled with a dry-pack mortar.

Dry-pack mortar shall consist of one part Portland cement and three parts sand, with just enough water to produce a workable consistency.

SV

9. CONCRETING IN COLD WEATHER

Concrete shall not be mixed nor placed when the daily atmospheric low temperature is less than 40 degrees unless facilities are provided to prevent the concrete from freezing.

Facilities for cold weather concreting shall consist of:

a. Use of warm concrete with temperatures from 55 degrees F to 65 degrees F.

b. Adequate protection from the weather, including the use of artificial heat, to prevent the temperature of the concrete from falling below 50 degrees F for a period of 3 days, and the relative humidity of the air near the concrete from falling below 40 percent.

c. Accelerating or water-reducing and accelerating admixtures shall be noncorrosive and conform to the requirements of ASTM C 494, Types C and E.

d. The contractor shall furnish to NRCS for approval, a written plan that shows how the contractor will meet the requirements of this specification. The plan must also show how the requirements of ACI Specification 306 will be met.

10. CONCRETING IN HOT WEATHER

Hot weather precautions should be taken when air temperatures are at or above 85 degrees F.

Concrete temperature shall be less than 90 degrees F during mixing, conveying and placing.

Water-reducing and/or retarding admixtures shall conform to the requirements of ASTM Specification C 494, Types A, B, D, F or G.

11. BACKFILLING NEW CONCRETE WALLS

Heavy equipment may not be operated within 3 feet of the new concrete wall.

Compaction within 3 feet of the wall will be by means of hand tamping or small hand-held tamping or vibrating equipment.

Backfilling and compaction of fill adjacent to new concrete walls shall not begin in less than 10 days after placement of the concrete or until the concrete strength at the site has been tested to be at least 3,000 psi. Backfill material shall be the type indicated on the drawings and shall be free of large stones or debris.

12. ADDITIONAL ITEMS WHICH APPLY TO THIS JOB

Please note in case of cold weather, we may be using a non-corrosive non-chloride admixture for concrete. It accelerates cement hydration resulting in shortened setting times and increased early compressive strengths. The admixture does not contain calcium chloride and is completely non-corrosive to reinforcing steel, metal decks and all metal components of your admixture storage and dispensing system. It is formulated to comply with ASTM C494 Type C and can be used at any dosage to comply with ACI 318 guidelines for chloride content of concrete.

RECEIVED
JUL 28 2017
DEPARTMENT OF
ENVIRONMENTAL MANAGEMENT
OFFICE OF LAND QUALITY

Indiana Department of Environmental Management

SOIL & WATER INFORMATION

For:

Adlock Broilers, LLC
P.O. Box 987
Columbia City, IN 46725
Whitley County
(Mailing Address)

Prepared By:

Agronomic Solutions, LLC
Melissa Lehman
7070 S 500 W
Topeka, IN 46571
(260) 593-2092

RECEIVED
JUL 28 2017
DEPARTMENT OF
ENVIRONMENTAL MANAGEMENT
OFFICE OF LAND QUALITY

Eickholtz, Inc.
Soil & Environmental Consulting

10489 N 900 E Kendallville IN 46755
Phone: (260)318-2858

Soil Survey prepared for:

S1, S2, S3
C/O Joe & Sarah Lopez
5300 N 250 W
Columbia City, IN 46725

Phone: *260-610-4630* Fax:

TOM A. EICKHOLTZ REGISTERED No. 26 STATE OF INDIANA PROFESSIONAL SOIL SCIENTIST

Site Information: Date: 7/18/2017

County: Whitley

Site Address: 5300 N 250 W

RECEIVED
JUL 28 2017
DEPARTMENT OF ENVIRONMENTAL MANAGEMENT
OFFICE OF LAND QUALITY

Landscape position: Upland

Slope: 8-16%

Parent Material: Glacial till

Depth to free water: >60" (5 feet)

Depth to seasonal watertable: 16" at S1, 10" at S2, 12" at S3

Notes/Additional Information:

Soil borings taken to a depth of 5 feet.
Soil textures are field measurements.

Investigator at the Site: Tom Eickholtz, Certified Soil Scientist, CPSS #3327, Indiana Registered Soil Scientist, IRSS #26

Data For Soil Profile # S1

Horizon Depth "	USDA Texture	Unified Texture	Structure	Consis-tence	Matrix Color	Mottle Color	Permeability in/hr.	Bulk Density gm/cm3	Notes:
0-11	L	ML-CL	M	FR	10YR 3/3	/	0.2-0.6	1.3-1.5	
11-16	CL	CL	M	FI	10YR 4/6	/	0.2-0.6	1.4-1.6	
16-28	SIC	CL	M	FI	10YR 4/6	10YR 5/2	0.2-0.6	1.4-1.6	seasonal water table
28-33	SICL	CL	W	FI	10YR 5/4	10YR 5/1	0.2-.06	1.5-1.7	
33-60	SICL	CL	S-Less	VFI	10YR 5/4	10YR 5/1	0.2-.06	1.5-1.7	

Data For Soil Profile # S2

Horizon Depth "	USDA Texture	Unified Texture	Structure	Consis-tence	Matrix Color	Mottle Color	Permeability in/hr.	Bulk Density gm/cm3	Notes:
0-10	L	ML-CL	M	FR	10YR 3/3	/	0.2-0.6	1.3-1.5	
10-22	SICL	CL	M	FI	10YR 4/6	10YR 5/2	0.2-0.6	1.4-1.6	seasonal water table
22-32	SIC	CL	M	FI	10YR 4/6	10YR 6/2	0.2-.0.6	1.4-1.6	
32-41	SICL	CL	W	FI	10YR 5/6	10YR 5/1	0.2-.06	1.5-1.7	
41-60	SICL	CL	S-Less	VFI	10YR 5/4	10YR 5/1	0.2-.06	1.5-1.7	

Data For Soil Profile # S3

Horizon Depth "	USDA Texture	Unified Texture	Structure	Consis-tence	Matrix Color	Mottle Color	Permeability in/hr.	Bulk Density gm/cm3	Notes:
0-12	SICL	CL	M	FI	10YR 3/3	/	0.2-0.6	1.3-1.5	
12-17	SICL	CL	M	FI	10YR 3/3	10YR 4/2	0.2-0.6	1.4-1.6	seasonal water table
17-32	SICL	CL	M	FI	10YR 4/3	10YR 5/2	0.2-0.6	1.4-1.6	
32-48	SIC	CL	M	FI	10YR 4/6	10YR 5/2	0.2-0.6	1.5-1.7	
48-60	SIC	CL	W	VFI	10YR 5/6	10YR 6/2	0.2-.06	1.5-1.7	

Eickholtz, Inc.
Soil & Environmental Consulting

10489 N 900 E Kendallville IN 46755
Phone: (260)318-2858

Soil Survey prepared for:

S4, S5, S6
C/O Joe & Sarah Lopez
5300 N 250 W
Columbia City, IN 46725

Phone: *260-610-4630* Fax

TOM A. EICKHOLTZ REGISTERED No. 26 STATE OF INDIANA PROFESSIONAL SOIL SCIENTIST

Site Information: Date: 7/18/2017

County: Whitley

Site Address: 5300 N 250 W

RECEIVED
JUL 28 2017
DEPARTMENT OF ENVIRONMENTAL MANAGEMENT
OFFICE OF LAND QUALITY

Landscape position: Upland

Slope: 8-16%

Parent Material: Glacial till

Depth to free water: >60" (5 feet)

Depth to seasonal watertable: 16" at S4, 14" at S5, 10" at S6

Notes/Additional Information:

Soil borings taken to a depth of 5 feet.
Soil textures are field measurements.

Investigator at the Site: Tom Eickholtz, Certified Soil Scientist, CPSS #3327, Indiana Registered Soil Scientist, IRSS #26

Data For Soil Profile # S4

Horizon Depth "	USDA Texture	Unified Texture	Structure	Consis-tence	Matrix Color	Mottle Color	Permeability in/hr.	Bulk Density gm/cm3	Notes:
0-7	L	ML-CL	M	FR	10YR 3/3	/	0.2-0.6	1.3-1.5	
7-16	SICL	CL	M	FI	10YR 5/4	/	0.2-0.6	1.4-1.6	
16-27	CL	CL	M	FI	10YR 4/6	10YR 5/2	0.2-0.6	1.4-1.6	seasonal water table
27-42	SIC	CL	W	FI	10YR 5/6	10YR 6/2	0.2-.06	1.5-1.7	
42-60	SICL	CL	S-Less	VFI	10YR 5/4	10YR 6/1	0.2-.06	1.5-1.7	

Data For Soil Profile # S5

Horizon Depth "	USDA Texture	Unified Texture	Structure	Consis-tence	Matrix Color	Mottle Color	Permeability in/hr.	Bulk Density gm/cm3	Notes:
0-11	L	ML-CL	M	FR	10YR 3/3	/	0.2-0.6	1.3-1.5	
11-14	CL	CL	M	FI	10YR 4/4	/	0.2-0.6	1.4-1.6	
14-31	SIC	CL	M	FI	10YR 4/6	10YR 5/2	0.2-.0.6	1.4-1.6	seasonal water table
31-36	SICL	CL	W	FI	10YR 5/6	10YR 5/1	0.2-.06	1.5-1.7	
36-60	SICL	CL	S-Less	VFI	10YR 5/4	10YR 5/1	0.2-.06	1.5-1.7	

Data For Soil Profile # S6

Horizon Depth "	USDA Texture	Unified Texture	Structure	Consis-tence	Matrix Color	Mottle Color	Permeability in/hr.	Bulk Density gm/cm3	Notes:
0-10	SICL	CL	M	FI	10YR 3/3	/	0.2-0.6	1.3-1.5	
10-18	SIC	CL	M	FI	10YR 4/6	10YR 5/2	0.2-0.6	1.4-1.6	seasonal water table
18-34	SIC	CL	M	FI	10YR 5/3	10YR 5/2	0.2-0.6	1.4-1.6	
34-40	SICL	CL	W	FI	10YR 5/4	10YR 5/1	0.2-.06	1.5-1.7	
40-60	SICL	CL	S-Less	VFI	10YR 5/4	10YR5/1	0.2-.06	1.5-1.7	

Eickholtz, Inc.
Soil & Environmental Consulting

10489 N 900 E Kendallville IN 46755
Phone: (260)318-2858

Soil Survey prepared for:

S7, S8, S9
C/O Joe & Sarah Lopez
5300 N 250 W
Columbia City, IN 46725

Phone: *260-610-4630* Fax:

TOM A. EICKHOLTZ REGISTERED No. 26 STATE OF INDIANA PROFESSIONAL SOIL SCIENTIST

Site Information: Date: 7/18/2017

County: Whitley

Site Address: 5300 N 250 W

RECEIVED
JUL 28 2017
DEPARTMENT OF ENVIRONMENTAL MANAGEMENT
OFFICE OF LAND QUALITY

Landscape position: Upland

Slope: 8-16%

Parent Material: Glacial till

Depth to free water: >60" (5 feet)

Depth to seasonal watertable: 17" at S7, 15" at S8, 16" at S9

Notes/Additional Information:

Soil borings taken to a depth of 5 feet.
Soil textures are field measurements.

Investigator at the Site: Tom Eickholtz, Certified Soil Scientist, CPSS #3327, Indiana Registered Soil Scientist, IRSS #26

Data For Soil Profile #S7

Horizon Depth "	USDA Texture	Unified Texture	Structure	Consis-tence	Matrix Color	Mottle Color	Permeability in/hr.	Bulk Density gm/cm3	Notes:
0-10	L	ML-CL	M	FR	10YR 3/3	/	0.2-0.6	1.3-1.5	
10-17	CL	CL	M	FI	10YR 3/3	/	0.2-0.6	1.4-1.6	
17-30	SIC	CL	M	FI	10YR 4/6	10YR 5/2	0.2-0.6	1.4-1.6	seasonal water table
30-37	SIC	CL	W	FI	10YR 5/6	10YR 6/2	0.2-.06	1.5-1.7	
37-60	SICL	CL	S-Less	VFI	10YR 5/4	10YR 5/1	0.2-.06	1.5-1.7	

Data For Soil Profile # S8

Horizon Depth "	USDA Texture	Unified Texture	Structure	Consis-tence	Matrix Color	Mottle Color	Permeability in/hr.	Bulk Density gm/cm3	Notes:
0-8	L	ML-CL	M	FR	10YR 3/3	/	0.2-0.6	1.3-1.5	
8-15	SICL	CL	M	FI	10YR 5/6	/	0.2-0.6	1.4-1.6	
15-26	SIC	CL	M	FI	10YR 4/6	10YR 5/2	0.2-.0.6	1.4-1.6	seasonal water table
26-39	SICL	CL	W	FI	10YR 5/4	10YR 5/1	0.2-.06	1.5-1.7	
39-60	SICL	CL	S-Less	VFI	10YR 5/4	10YR 6/1	0.2-.06	1.5-1.7	

Data For Soil Profile # S9

Horizon Depth "	USDA Texture	Unified Texture	Structure	Consis-tence	Matrix Color	Mottle Color	Permeability in/hr.	Bulk Density gm/cm3	Notes:
0-11	L	ML-CL	M	FR	10YR 3/3	/	0.2-0.6	1.3-1.5	
11-16	CL	CL	M	FI	10YR 4/6	/	0.2-0.6	1.4-1.6	
16-27	SIC	CL	M	FI	10YR 4/6	10YR 5/2	0.2-0.6	1.4-1.6	seasonal water table
27-38	CL	CL	W	FI	10YR 5/4	10YR 5/1	0.2-.06	1.5-1.7	
38-60	CL	CL	S-Less	VFI	10YR 5/4	10YR 5/1	0.2-.06	1.5-1.7	

Joe Lopez

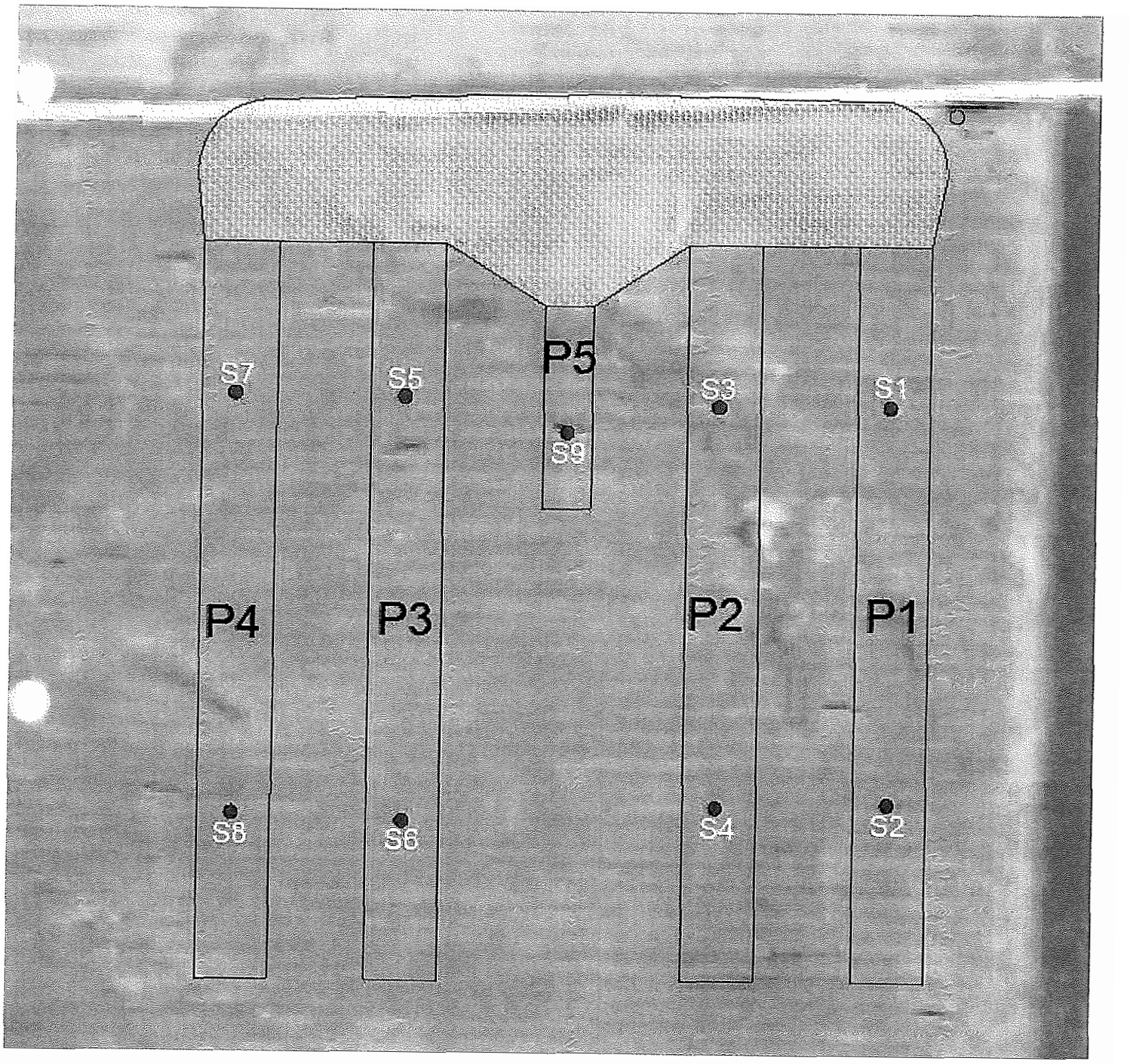

Site Map

Site Map

Proposed Driveway
Soil Boring Pt
Well

RECEIVED
JUL 28 2017
DEPARTMENT OF
ENVIRONMENTAL MANAGEMENT
OFFICE OF LAND QUALITY

0 100 200
feet

N

IDEM

Indiana Department of Environmental Management

MANURE MANAGEMENT PLAN

For:

Adlock Broilers, LLC
P.O. Box 987
Columbia City, IN 46725
Whitley County
(Mailing Address)

Prepared By:

Agronomic Solutions, LLC
Melissa Lehman
7070 S 500 W
Topeka, IN 46571
(260) 593-2092

RECEIVED
JUL 28 2017
DEPARTMENT OF
ENVIRONMENTAL MANAGEMENT
OFFICE OF LAND QUALITY

CFO / CAFO APPLICATION PACKET
Manure Management Plan (MMP)

Part of State Form 55051 (R2 / 6-15)
Approved by State Board of Accounts, 2015
Confined Feeding Operation (CFO)
National Pollutant Discharge Elimination System Concentrated Animal Feeding Operation (NPDES CAFO)

INDIANA DEPARTMENT OF ENVIRONMENTAL MANAGEMENT
Confined Feeding Section
Office of Land Quality
100 North Senate Avenue
MC 65-45, IGCN 1101
Indianapolis, Indiana 46204
(800) 451-6027 extension 2-4473

INSTRUCTIONS: The below required information supplements the general information and plot maps attachments for a complete CFO Approval Renewal application or construction application. CFO Approval Renewal applications and construction applications for expansions at currently regulated operations may also utilize the Marketing and Distribution of Manure attachment if appropriate. Complete all portions of the form below. This form is required and supersedes all previous versions. IDEM will not accept substitutes, altered, or previously supplied forms.

I. MANURE MANAGEMENT PLAN

A. Manure Testing

Consult Purdue University Cooperative Extension Service Publications AY-277, ID-101, ID-205 "Swine Manure Management Planning", ID-206 "Poultry Manure Management Planning", ID-208 "Dairy Manure Management Planning" for guidance on procedures for manure testing.

1. Manure Sample Collection Procedures:
   Take samples while manure is being spread or mixed. Fill a plastic container 2/3 full, squeeze out air.
   Samples will be refrigerated or frozen prior to mailing to the private laboratory.

2. Nutrient Assessment:
   - ☒ Private laboratory does a nutrient analysis of sample(s).
   - ☐ Other *(explain)*: _____

3. Sampling Frequency:
   - ☐ Annual sampling required for CAFOs with a NPDES permit.
   - ☒ Minimum of once every year for CFOs.

B. Soil Testing

You can consult Purdue University, Cooperative Extension Service Publication AY-281 for guidance on procedures for soil testing. A soil test must provide sufficient information about soil fertility to allow for nutrient recommendations for existing or planned crops. Soil tests may not represent more than twenty (20) acres per sample.

1. Do, or will, you perform soil testing for this operation?
   - ☐ Yes, all or a portion of manure is, or will be, applied to land controlled by the operator (complete 2-4 below).
   - ☒ No, 100 % of manure is, or will be, either marketed or distributed (2-4 below do not need to be completed).

2. Sample Collection Method:
   - ☐ Management unit (field level)
   - ☐ Grid method
   - ☐ By soil type
   - ☐ Other *(explain)*: _____

RECEIVED
JUL 28 2017
DEPARTMENT OF ENVIRONMENTAL MANAGEMENT
OFFICE OF LAND QUALITY

3. Nutrient Assessment:
   - ☐ Private laboratory does nutrient analysis.
   - ☐ Other *(explain)*: _____

4. Sampling Frequency:
   - ☐ Minimum of once every four (4) years for CFOs and CAFOs.

II. SPRAY IRRIGATION

A. Does the operation currently, or propose to, apply manure by spray irrigation?

☐ Yes ☒ No

If yes, is the spray irrigation in a flood plain?

☐ Yes ☐ No

C. CAFOs with NPDES permits must conduct spray irrigation in a flood plain in accordance with the NPDES CAFO individual permit rule for the operation, as applicable.

D. CFOs may only conduct spray irrigation in a flood plain in accordance with a spray irrigation plan approved by IDEM. (327 IAC 19-14-5(d))

III. SURFACE APPLICATION OF MANURE TO FROZEN OR SNOW-COVERED GROUND

A. CFOs which are not large CAFO-sized farms and have 120 days or less of approved storage capacity may request approval to surface apply manure to frozen or snow-covered ground based on a case-by-case authorization from the commissioner per 327 IAC 19-14-4(i).

Have you included additional information to obtain or renew a commissioner's authorization?

☐ Yes ☒ No

B. CAFOs with a NPDES permit and CFOs (not CAFO-sized) with 180 days of approved storage can request approval for surface application of manure to frozen or snow-covered ground under the provisions of 327 IAC 19-5-1 as an Alternate Design or Compliance Approach which meets the performance standards of 327 IAC 19-3-1.

Does the operation plan to submit a request for approval of an Alternate Design or Compliance Approach?

☐ Yes ☒ No

C. CFOs which are not large CAFO-sized farms may request approval to surface apply manure to frozen or snow-covered ground resulting from an unforeseen emergency condition per 327 IAC 19-14-4(g-h). Improper design or management of manure storage facilities will not qualify as an emergency condition.

V. CFO APPROVAL RENEWAL INFORMATION

(THIS SECTION IS ONLY FOR CFO APPROVAL RENEWAL APPLICATIONS.)

A. Farm ID Number: _____

B. Total number of approved confinement barns currently present at operation: _____

C. Total number of open confinement lots (earthen or concrete) currently present at operation: _____

D. Total **approved** capacity of animals which can be confined at operation: _____

E. Are earthen lagoon(s) or pit(s) currently present at operation? ☐ Yes ☐ No

F. Separate from confinement barn(s), are any concrete or metal tanks currently present at operation? ☐ Yes ☐ No

G. Separate from confinement barn(s), are any solid manure storage building (litterstack, barn, etc.) currently present at operation? ☐ Yes ☐ No

H. Since the last renewal, have any confinement barns been closed? If yes, detail in J. below which barn(s) and the animal number(s) housed within. ☐ Yes ☐ No

I. Since the last renewal, have any lagoon(s), pit(s), or tank(s) been closed? If yes, detail in J. below which structure(s). ☐ Yes ☐ No

J. Detail any changes in manure storage capacity or animal capacity (number/species/type) at the operation that have been made since the time of the last CFO approval/renewal.

- If the changes increase manure production, you must also request an amendment to your CFO Approval.
- If the changes do not increase manure production, you must also submit a CFO Facility Change Notification (SF 50209).
- If a structure has been closed and has not been inspected by IDEM CFO Compliance staff, you must also submit a CFO Closure Certification (SF 55054).

RECEIVED
JUL 28 2017
DEPARTMENT OF ENVIRONMENTAL MANAGEMENT
OFFICE OF LAND QUALITY

CFO / CAFO APPLICATION PACKET
Certification of Required Acreage for Land Application
Part of State Form 55051 (R2 / 6-15)
Approved by State Board of Accounts, 2015
Confined Feeding Operation (CFO)
National Pollutant Discharge Elimination System Concentrated Animal Feeding Operation (NPDES CAFO)

INDIANA DEPARTMENT OF ENVIRONMENTAL MANAGEMENT
Confined Feeding Section
Office of Land Quality
100 North Senate Avenue
MC 65-45, IGCN 1101
Indianapolis, Indiana 46204
(800) 451-6027 extension 2-4473

INSTRUCTIONS: *Under 327 IAC 19-7-1(d), the owner/operator of an existing CFO that is expanding must certify the minimum number of acres is available for land application of manure generated at the CFO. The minimum acreage must be calculated based on nitrogen and phosphorus limitations as applicable (See 327 IAC 19-14-3). This form also allows marketing or distribution records to document a reduction in required acreage.*

I. APPLICANT INFORMATION

Name:	Adlock Broilers, LLC	Farm ID Number:	
Mailing Address:	P.O. Box 987		
City:	Columbia City		
State:	IN	ZIP Code:	46725
Telephone:	(260) 610-4630		
Operation County:	Whitley		

II. CERTIFICATION

"I certify as owner and/or operator that the minimum acreage for manure application is available; and was calculated based on the nitrogen and phosphorus limits in 327 IAC 19-14-3 as applicable."

Acres Required:	250	Acres Available:	0
Name *(print)*:	Joe Lopez	Title:	Owner/Operator
Signature:		Date Signed: *(month, day, year)*	7-27-17

III. MARKETING AND DISTRIBUTION WAIVER OPTION

If a manure marketing and distribution program is used, IDEM may allow for a waiver of some or all of a facility's total land application acreage requirements based on the submittal of:

1. The marketing and distribution records documented in the facility operating records from at least the previous three (3) years showing the amount of manure produced and marketed at the facility; or
2. Contracts for the entire approval term for marketing the projected amount of manure produced at the facility.

Refer to the Marketing and Distribution of Manure sheet in this application packet for a detailed description of the documentation required for this waiver.

Percentage of total annual manure generated documented by marketing and distribution records/contracts: *(Attach all supporting documentation.)*	100 %

RECEIVED
JUL 28 2017
DEPARTMENT OF ENVIRONMENTAL MANAGEMENT
OFFICE OF LAND QUALITY

June 19, 2017

This agreement is between Adlock Broilers, LLC of Whitley County and Cormany Farms, Inc. Cormany Farms, Inc. can be reached by calling, (260) 248-6910. His mailing address is: 3349 **N** 350 W Columbia City, I**N** 46725.

Cormany Farms, Inc. agrees to take 100% of the poultry manure from P1-P4 barns from the Adlock Broilers, LLC farm located at 5300 **N** 250 W, Columbia City, Indiana, for use of land applying for nutrient organic matter value. The term of this agreement is for five years starting June 19, 2017 or for the life of the Adlock Broilers, LLC CFO Permit, whichever is longer. By June 19, 2022 both parties may mutually agree to extend this agreement for additional time.

Cormany Farms, Inc. will load the manure onto their trucks and haul it. Adlock Broilers, LLC will provide a nutrient analysis value for the poultry manure that is being distributed to Cormany Farms, Inc.

Cormany Farms, Inc. plans to take 100% of the manure from the P1-P4 barns produced and will pay a fair market value for the poultry manure removed from the Adlock Broilers, LLC farm. Once all of the proposed construction is completed, the site is estimated to produce 204,400 ft^3 of manure, according to Table 1 on page 38 of the Guidance Manual for Indiana's Confined Feeding Program.

The poultry manure will be handled in accordance to IDEM CFO rules and Office of Indiana State Chemist regulations. Brad Cormany from Cormany Farms, Inc. has a Private Applicators License # PA203695.

Adlock Broilers, LLC

Cormany Farms, Inc

RECEIVED
JUL 28 2017
DEPARTMENT OF
ENVIRONMENTAL MANAGEMENT
OFFICE OF LAND QUALITY

CFO / CAFO APPLICATION PACKET
Marketing and Distribution of Manure
Part of State Form 55051 (R2 / 6-15)
Approved by State Board of Accounts, 2015
Confined Feeding Operation (CFO)
National Pollutant Discharge Elimination System Concentrated Animal Feeding Operation (NPDES CAFO)

INDIANA DEPARTMENT OF ENVIRONMENTAL MANAGEMENT
Confined Feeding Section
Office of Land Quality
100 North Senate Avenue
MC 65-45, IGCN 1101
Indianapolis, Indiana 46204
(800) 451-6027 extension 2-4473

INSTRUCTIONS: *This sheet describes the documentation that must be submitted to IDEM with the Certification of Required Acreage for Land Application form when using the marketing and distribution waiver option in Section III of that form.*

I. MARKETING AND DISTRIBUTION OF MANURE

IDEM considers manure marketing and distribution as an acceptable manure management procedure. Both new and existing operations are eligible to request an acreage waiver for marketing and distribution of manure. IDEM will allow for credits of up to one hundred percent (100%) of manure generated to be given for operations with three (3) years historical data and marketing and distribution records. Proportionately, credit will be given on the required amount of land application acreage supplied in the Plot Maps attachment. In addition, new and existing operations can provide contracts for the entire approval term for marketing and distributing a percentage, up to 100%, of the projected amount of manure produced at the facility.

II. REQUIRED DOCUMENTATION FOR MARKETING AND DISTRIBUTION WAIVER

To justify the waiver, the documentation provided to IDEM must:

A. Be from the previous three (3) years for the facility.

B. Include the following details which are captured on the IDEM provided CFO Marketing or Distribution of Manure Information Sheet. This form may be found at:
http://www.in.gov/idem/files/form_cfo_manure_marketing.doc

1. The name(s) of each party who received manure.
2. The date(s) manure transferred to each party.
3. The amount(s) of manure transferred to each party.
4. Information regarding manure nutrient values.
5. The list of land application restrictions that was provided to each party receiving manure.

C. Copies of individual completed CFO Marketing or Distribution of Manure Information Sheets, along with, an overall facility synopsis may be submitted. Attach any and all sheets to this form. OR,

D. Include contracts for the entire approval term for marketing the projected amount of manure produced at the facility.

III. MARKETING AND DISTRIBUTION CALCULATION EXAMPLES

The examples below detail calculations for determining required land application acreage to be submitted with the Plot Maps attachment.

Using the conversions for manure and acreage requirements on page 52 in the CFO Guidance Manual, a CFO with 30,000 broilers would need 41.7 acres (30,000 chickens/720 chickens per acre) of land available for manure application. The chickens would produce 38,325 cu.ft./yr. of manure (30,000(0.0035/day x 365 days)) according to page 38, Table 1 in the CFO Guidance Manual.

A. If 100% of the manure generated is marketed and distributed, you are not required to provide soil survey maps to show that land application acreage is available for manure spreading.

B. If 60% of the manure generated is marketed and distributed, you must provide soil survey maps to show at least 40% of the required land application acreage for your operation is available for manure spreading. In this example, 40% of 41.7 acres is 16.7 acres (41.7 x .40 = 16.7).

RECEIVED
JUL 28 2017
DEPARTMENT OF
ENVIRONMENTAL MANAGEMENT
OFFICE OF LAND QUALITY